MIT 202 – FIX TRADING GATEWAY (FIX5.0)

Issue 21.1

04 August 2026

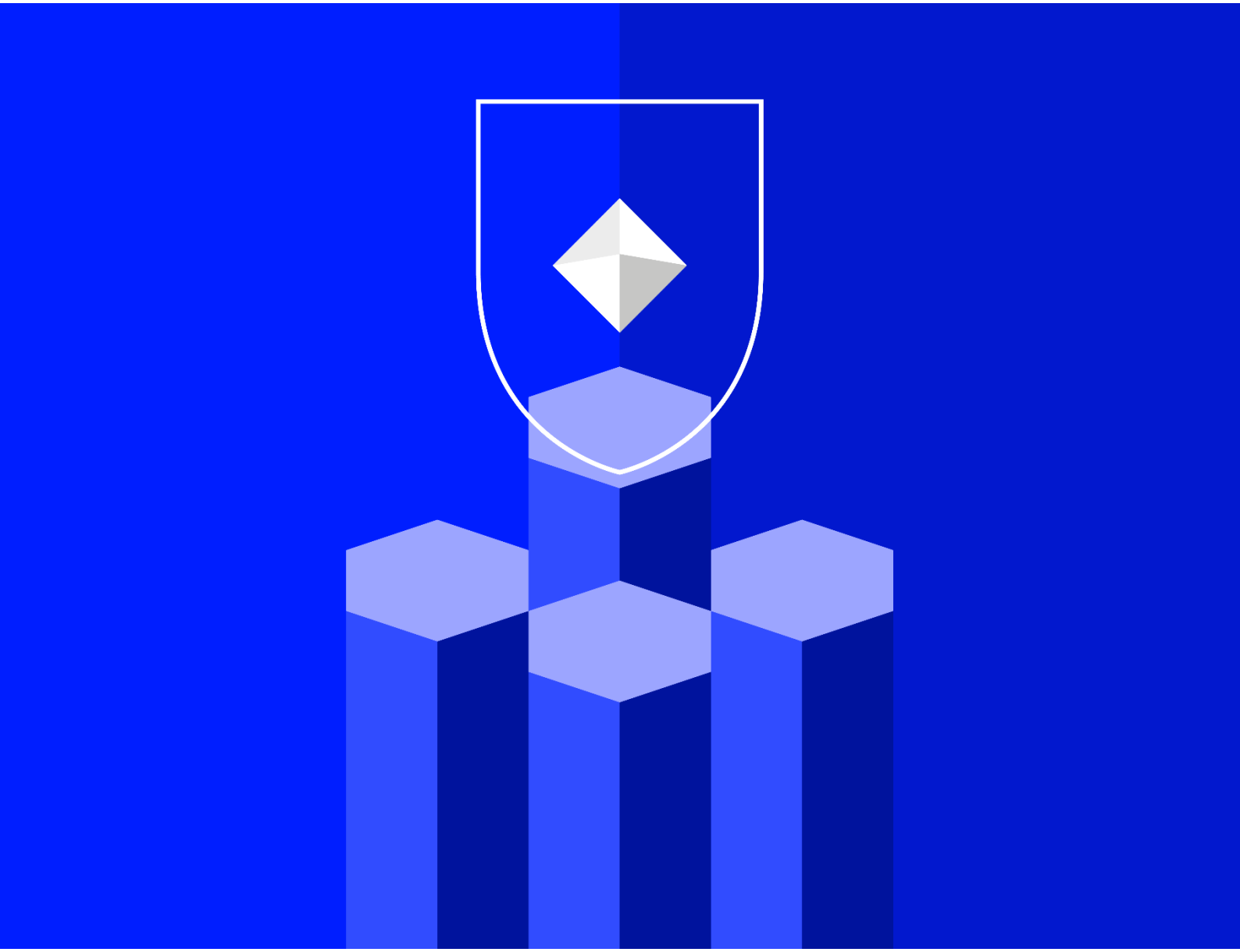

LONDON STOCK EXCHANGE

Contents

Disclaimer 4
1.0 Introduction 5
1.1 Purpose 5
1.2 Readership 5
1.3 Document series 5
1.4 Document history 6
1.5 Enquiries 14
2.0 Service description 15
2.1 Order handling 15
2.2 Quote handling 22
2.3 Security identification 24
2.4 Party identification 25
2.5 Market operations 26
2.6 Timestamps and dates 27
2.7 Repeating groups 27
2.8 Auto Cancel on Disconnect 27
2.9 Generating Reject Messages 28
2.10 Functional & Implementation Limitations 28
2.11 Mapping Order ID from FIX to GTP 29
2.12 Mapping Trade Match ID (TVTIC) to GTP 31
2.13 MiFID II changes 32
2.14 RFQ models 34
3.0 Connectivity 35
3.1 CompIDs 35
3.2 Production IP addresses and ports 35
3.3 Failover and recovery 35
3.4 Connectivity Policy 35
3.5 Message Rate Throttling 36
3.6 Mass Cancellation On Disconnect 36
4.0 FIX connections and sessions 37
4.1 Establishing a FIX connection 37
4.2 Maintaining a FIX session 38
4.3 Terminating a FIX connection 39
4.4 Re-establishing a FIX session 39
4.5 Matching system failure 39
5.0 Recovery 40
5.1 Resend requests 40

5.2 Possible duplicates 40
5.3 Possible resends 40
5.4 Transmission of missed messages 40
6.0 Message formats 41
6.1 Supported message types 41
6.2 Message Header and Trailer 43
6.3 Administrative messages 44
6.4 Application messages: order handling 47
6.5 Application messages: quote handling 68
6.6 Application messages: others 95
6.7 Components of application messages 96
7.0 Process flows 97
7.1 Order handling 97
7.2 Quote handling 98
8.0 Service availability 101

Disclaimer

London Stock Exchange has taken reasonable efforts to ensure that the information contained in this publication is correct at the time of going to press, but shall not be liable for decisions made in reliance on it. London Stock Exchange will endeavour to provide notice to customers of changes being made to this document, but this notice cannot be guaranteed. Therefore, please note that this publication may be updated at any time. The information contained in this publication and any other publications referred to herein are for guidance purposes only.

1.0 Introduction

London Stock Exchange has provided a FIX trading gateway that enables Member Firms to submit orders and/or quotes and to receive real-time information on executed trades.

The interface is a point-to-point service based on the technology and industry standards TCP/IP, FIXT and FIX. The session and application event models and messages are based on versions 1.1 and 5.0 (Service Pack 2) of the FIXT and FIX protocols respectively.

1.1 Purpose

The purpose of this document is to provide a technical description of the FIX trading gateway available on the Millennium Exchange platform.

1.2 Readership

This document outlines how to connect to the FIX trading gateway and the detailed message types and fields used.

When read in conjunction with the other Millennium Exchange guides, it is intended that these documents provide all of the details directly connected London Stock Exchange customers require to develop to the new services.

This document is particularly relevant to technical staff within the Exchange's Member Firms.

1.3 Document series

This document is part of series of documents providing a holistic view of full trading and information services available from London Stock Exchange following the migration to Millennium Exchange.

The current series of documents are set out below:

- MIT201 – Guide to the New Trading System
- **MIT202 – FIX Trading Gateway (FIX 5.0) (this document)**
- MIT203 – Native Trading Gateway Specification
- MIT204 – Post Trade Gateway (FIX 5.0) Specification
- MIT205 – Drop Copy Gateway (FIX 5.0) Specification
- MIT301 – Guide to Market Data Services
- MIT304 – Regulatory News Service Specification
- MIT401 – Guide to Reference Data Services
- MIT501 – Guide to Testing Services
- MIT502 – Guide to Application Certification
- MIT503 – Certification Report
- MIT601 – Guide to Trading Services Disaster Recovery
- MIT701 – Guide to Sponsored Access
- MIT801 – Reject Codes

This series principally covers non-regulatory information. It does not override or supersede the Rules of London Stock Exchange, the AIM Rules or Admission and Disclosure Standards and is intended to be read in conjunction with these Rules documents and the Millennium Exchange Parameters document.

The latest version of this document series can be found at the following link:

http://www.londonstockexchange.com/products-and-services/millennium-exchange/technicalinformation/technicalinformation.htm

1.4 Document history

This document has been through the follow iterations:

Issue	Date	Description
8.0	23 May 2011	The eighth issue of this document published via London Stock Exchange's website and distributed to customers.
8.1	14 June 2011	New logon functionality will now be introduced in the next functional release (yet to be scheduled). Please refer to page 28.
9.0	23 September 2011	The ninth issue of this document published via London Stock Exchange's website and distributed to customers.
10.0	9 December 2011	The tenth issue of this document published via London Stock Exchange's website and distributed to customers.
10.1	28 September 2012	Amended to include new PassiveOnlyOrder and PriceDifferential tags. Published on London Stock Exchange's website.
10.2	1 November 2012	Amended to include Connectivity Policy Section 3.4. Added additional guidance on Passive Only Order and Price Differential functionality.
10.3	22 March 2013	Amended to reflect the latest Millennium enhancements.
10.3	5 April 2013	Update to Sections 6.1.2.2; 6.1.3.2; 6.4.5; 6.5.5 to remove references to Trade Correct and to remove duplicate Tag 336 from Execution Report.
10.3	18 April 2013	6.4.5 – Enum 3 added to tab 378 in ER. Tag 336 removed completely.
11.0	5 July 2013	Amended to reflect the latest Millennium enhancements.
11.1	2 June 2014	Further amendments to reflect the latest Millennium enhancements. Sections 2.2.1; 2.1.4; 6.4.1; 6.4.4; 6.4.5 and 6.7.2 have been updated.
11.2	31 October 2014	Amended to reflect ITCH rebranding to MITCH.
11.3	21 January 2015	The following sections have been amended or added to support the new Cross Order functionality and additional amendments: 2.2.1 – New table added describing the New Order types for Cross/BTF order functionality. 2.1.2.1 & 2.1.2.2 – Cancellation behaviour for the new Cross/BTF orders. 2.1.2.3 – Amendment information for the new Cross/BTF orders, plus clarification around how the system handles in-flight conditions on amendments. 2.1.4 – Clarification on the treatment of Client Order IDs when an order is cancelled by Market Operations. 2.8 – Cancel on Disconnect/Logout not applicable to Cross Orders/BTF. 2.10.1.18 – Clarification on how usage of the Cancel on Disconnect functionality is managed at the end of the day. 2.10.1.19 – Additional information on cross order cancellations. 3.5 – Clarification on message throttling behaviour. 3.6 – Cancel on Disconnect/Logout not applicable to Cross Orders/BTF. 4.1 – Further clarifications around logon behaviour. 6.1.2.1 – New message types added for New Order Cross and Cross Order Cancel request messages. 6.4.1 – Clarification that the TimeInForce(59) should not be populated if the order is a CPX order. 6.4.3 & 6.52 – Clarification to the use of TargetParty Tags 1461,1462,1463,and 1464.

Issue	Date	Description
		6.4.5 – Tag 44 in the Execution Report. Clarification around the meaning of the price field if Exec Type is Restated. Additional tags (548,549 and 551) to support Cross order implementation. 6.4.8 – New Order Cross message details. 6.4.9 – Cross Order Cancel Request message details. 6.7.1 – Clarification of the use of tag 448 PartyID. 8.3 – New Event model for Cross Orders. See **MIT902 – Cross Orders Message Change Guidelines** for full details on all changes.
11.4	16 June 2015	The following sections have been amended or added to clarify existing behaviour and also to support Pegged Order Enhancements: 2.1.1 – Included description of new Minimum Execution Size (MES) for pegged and pegged limit order types. Also change in behaviour for pegged limit orders where limit orders no longer get cancelled if limit price is worse than midpoint. 2.1.2.1, 2.1.2.2 and 2.1.2.3 – Clarification of system behaviour if an order is cancelled or modified by a different user to the submitter. 2.2.2.1 – Corrected description as LSEG does not support single sided quotes. 2.2.2.3 – Clarification of system behaviour if a client sends a Mass Quote Cancel Request after post close. Also improved table description. 2.5.2 – Standardised the paragraph on trade cancellations. 2.10.17 – Removed Price Differential. 3.4 – Clarification of system behaviour and expected customer actions upon successful connection to the secondary gateway following a primary gateway failover. 3.5 – Standardised the message rate throttling description. 3.6 – Clarification of system mass cancel behaviour if a client logs out or disconnects after post close session. 4.1 – Correction to description of system behaviour if additional client messages are sent before the exchange of logon messages. 4.2.2 – Described system behaviour if heart beat interval is set to zero during logon. 6.4.1, 6.4.4, 6.4.5 – New Minimum Quantity Tag (MES) for enhanced pegged order functionality. 6.4.5 – Clarification on population of CrossID and improved description for ExecRestatementReason on Execution Reports. Removed PriceDifferential. 6.4.8/7.3.2 – Clarified the system validation of CrossIDs and also corrected the reject text for a missing TIF. 6.5.2 – Improved description of mandatory TargetParty tags. 6.5.3 – Corrected fact that QuoteType is not a required tag on a Quote Status Report.
11.5	16 September 2015	The following sections have been amended to clarify behaviour of message throttling, the Minimum Quantity Tag (MES) and the ExpireTime field: 3.5 – Clarified the behaviour of message throttling. 6.4.1, 6.4.4 – Clarified that MES is not applicable to pegged IOC/FOK orders and only applicable to pegged DAY/GTT orders. 6.4.4 – Amended the behaviour of the ExpireTime field in Order Cancel/Replace Request. 6.4.5 – Removed duplicate row for tag 103.

Issue	Date	Description
11.6	16 August 2016	The following sections have been amended to aid clarity and also to reflect the changes introduced in the Millennium 9.1 upgrade: 2.1.4 – Clarified Order Cancel and Order Cancel/Replace behaviour. Removed reference to CPP session since it has been removed. 2.4 – Clarified Party identification behaviour. 2.5.2 – Clarified Trade Cancellation behaviour. 2.6 – Clarified SendingTime (60) behaviour. 2.10.14 – Amended the behaviour of what happens when an undefined tag is sent along with Administrative and Application messages. 3.4 – Clarified Connectivity Policy. 4.1 – Clarified Establishing a Connection behaviour. 6.1.3 – Added new messages for RFQ functionality and clarified the descriptions of existing messages. 6.2.1 – Clarified DeliverToCompID behaviour. 6.3.1 – Added new SessionStatus reason. 6.4.1 – Removed enum ‘C’ in the OrderCapacity tag. Clarified ExpireDate/ExpireTime behaviour. 6.4.1-6.4.4, 6.4.6-6.4.9 – Clarified ClOrdID behaviour. 6.4.4 – Removed Trading Session Component Block. Clarified ExpireDate/ExpireTime behaviour. 6.4.5 – Added LastLiquidityInd tag. 6.4.5, 6.5.3– Clarified Text field behaviour. 6.5.1 – Added tags RFQID, BidID, OfferID and PrivateQuote. QuoteMsgID is no longer a required field. Added enum ‘2’ in QuoteType. Clarified behaviour of OrderCapacity and Capacity tags. 6.5.2 – Added RFQID and OrderBook tags. 6.5.3 – Added tags ExpireTime, QuoteReqID, RFQID, BidID and OfferID. Added enum ‘2’ to QuoteType tag. 6.5.5 – Added RFQID and MDEntryID tags. Added missing enums ‘4’ and ‘C’ in Exectype tag. 6.5.6 – 6.5.9 – Added new messages for the RFQ functionality. 6.7.1 – Added enums ‘37’ and ‘66’. 7.3.2 – Clarified Business Reject Reason. 9.0 – Corrected Telnet Access time.
	15 November 2016	The following sections have been updated to aid clarity, and include the change in RFQ execution policy from ‘Best Execution’ to ‘Select and Match’. 3.3 – Clarified Failover behaviour. 6.4.1, 6.4.4 – Clarified ExpireTime/ExpireDate behaviour. 6.5.5 – Added tag TypeOfTrade. 6.5.9, 8.4.15 – Added tags Cover Price, Bid ID and Offer ID.

Issue	Date	Description
11.7	7 April 2017	The following sections have been amended to aid clarity and also to reflect the changes introduced in the Millennium 9.2 (MiFID II compliant) upgrade: 2.1.1.1, 2.12.3, 6.4.1, 6.4.5, 6.4.8, 6.5.1, 6.5.5, 6.5.9, 8.2.6, 8.2.7, 7.4.10, 7.4.15, 7.4.16, 7.4.17,7.4.18, 7.4.25, 7.4.27 – Clarified Order Capacities. 2.4, 2.13.5 – Clarified Party Identification behaviour. 2.5.1 – Clarified Order Cancellation by Market Operations behaviour. 2.6, 2.13.1– Clarified Timestamps and dates behaviour. 2.13.2, 6.5.3, 6.5.8, – BidID and OfferID behaviour will now also be populated for quotes. 2.13.4, 6.4.5, 6.5.5, 8.4.16, 8.4.17 – Added a new NoTrdRegPublications (2668) Repeating Group to the Order and Quote Execution Reports for Waiver Flags. 6.2.1 – Clarified DeliverToCompID behaviour. 6.4.1, 6.4.5, 6.4.8, 6.5.1, 6.5.3, 6.5.5, 6.5.6, 6.5.7, 6.5.8, 6.5.9 – Clarified NoPartyIDs, PartyID, PartyIDSource, PartyRole behaviour and added new Party Identification enums. Added PartyRoleQualifier tag, Order Attribute component block and OrderOrigination tag. 6.5.3 – Clarified QuoteStatus description. 6.7.1 – Removed trading party component block and included the party identification tags in the individual messages. Changed all references of enum 12 to 100 for the Trader ID PartyRole.
11.7.1	27 June 2017	The following sections have been updated to aid clarity: 2.2.2.3 – Clarified Mass Cancelling Quotes behaviour 2.10 – Clarified Functional & Implementation Limitations behaviour 6.4.1, 6.4.5, 6.5.1, 6.5.5 – Clarified NoPartyIDs 6.4.1, 6.4.8, 6.5.1, 6.5.6 – Clarified PartyIDSource and PartyRoleQualifier behaviour 6.5.3, 6.5.8 – Clarified BidID and OfferID behaviour 6.4.5 – Clarified PartyRole behaviour
11.7.2	9 August 2017	The following sections have been updated to aid clarity: 2.4.2 – Removed scenario 12 from the table 6.4.1, 6.4.2, 6.4.4, 6.4.5, 6.4.8, 6.5.1, 6.5.3, 6.5.5 – Clarified PartyRole (452) behaviour. Trader ID (100) is optional. 8.0 – Clarified that Telnet and Login access are only available until 17:32 UTC.
11.7.3	15 August 2017	The following sections have been updated to aid clarity: 2.10.22 – Added the limitation 6.3.6 – Clarified SessionRejectReason (373) description 6.4.5 – Clarified PartyRole (452) behaviour 6.4.6 – Clarified CxlRejReason (102) behaviour 6.4.7 – Clarified MassCancelRejectReason (532) behaviour 6.5.3, 6.5.4 – Clarified QuoteRejectReason (300) behaviour 6.5.4 – Clarified QuoteEntryRejectReason (368) behaviour 6.6.1 – Clarified BusinessRejectReason (380) behaviour 7 – Removed section since MIT801 has all the applicable Reject reasons and codes

Issue	Date	Description
11.7.4	23 August 2017	The following sections have been updated to aid clarity: 2.13.4 – Corrected the OILQ flag typo 2.7 – Clarified Repeating Groups behaviour
11.7.5	8 September 2017	The following sections have been updated to aid clarity: 2.1.4, 6.4.5 – Reference to order being amended by Market Operations is removed 6.4.5 – Updated the description of the DisplayQty(1138) 6.4.5 – The value in TrdRegPublicationReason (2670) for OILQ flag is corrected 6.4.5 – Description of ExecRestatementReason (378) is updated to aid clarity. The reference to the auction call for the enum 100 is removed, since it is also valid for iceberg replenishment during Regular Trading. 6.5.2 – The description of NoTargetPartyIDs (1461) is corrected.
11.7.5	7 November 2017	The following sections have been updated to aid clarity: 6.4.1 – Clarified Party Role (452) behaviour 6.5.1 – Clarified Party Role (452) behaviour
11.8	28 Aug 2018	2.8 – Added more details for 'Auto Cancel on Disconnect' feature, no actual changes in the functionality. 2.13.3 – Minor update in the description 2.14 – The new Section is added to describe RFQ Models 6.4.1- Added a clarification that PartyID(448)=0'None' is not valid for PartyRole (4520=12 'Executing Trader' 6.4.1 – OrderCapacity(528) – references to pre-MiFID II capacities are removed 6.4.2 – PartyID (448) – Added a clarification that PartyRole(452)=100 is ignored if specified 6.4.4- PartyRole (452) – Added a clarification regarding TraderID 6.4.5 – LastPx(31) field – Added a clarification that it will not be populated with Exec Type(150) 6.4.5 – PartyID (448) – Clarified how PartyID with PartyRole (452)=17 is populated for cleared, not cleared and internalised trades 6.4.5 – PartyRole (452) – Added a clarification 6.4.5 – OrderCapacity(528) – References to pre-MiFID II capacities are removed 6.4.8 – OrderCapacity(528) – References to pre-MiFID II capacities are removed 6.4.8 – PartyRole (452) – Added a clarification 6.5.1 – Two new sub sections are created to specify the format for: 6.5.1.1 – client initiated message 6.5.1.2 – server initiated message OrderCapacity(528) – References to pre-MiFID II capacities are removed 6.5.5 – LastPx(31) field – Added a clarification that it will not be populated with Exec Type(150) 6.5.5 – PartyID (448) – Added a clarification how PartyID with PartyRole (452)=17 is populated for cleared, not cleared and internalised trades 6.5.5 – PartyRole (452) – Added a clarification 6.5.5 – OrderCapacity(528) – References to pre-MiFID II capacities are removed

Issue	Date	Description
		6.5.6 – Two new sub sections are created to specify the format for: 6.5.6.1 – client initiated message 6.5.6.2 – server initiated message New fields are added to Quote Request for Auto RFQ: – OrderCapacity (528) – QuoteRequestType (303) – Price (44) – AccountType (581) – RFQExecutionDelay (33001) – RFQMinQuotes (33002) – RFQDiscloseSide (33004) The offset is corrected for the Trading party component (453) and Tags 448, 447, 452, 2376 6.5.7 – Two new sub sections are created to specify the format for: 6.5.7.1 – client initiated message 6.5.7.2 – server initiated message PartyRole (452) – Added clarification Component 'Order Attributes', Tag 1724 – clarified that it is only populated if the value was specified by client 6.5.8 – Tag (30006) is mandatory 6.5.9 – Two new sub sections are created to specify the format for: 6.5.9.1 – client initiated message 6.5.9.2 – server initiated message 6.7.2 Updated description for NoOrderAttributes(2593) – a value more than two will not be allowed 7.4 – RFQ event model is removed as it is now outdated, and RFQ related messages are splitted into client initiated and server initiated in section 6. This section
11.9	19 May 2019	2.1.2.2 – Mass cancellation description amended to include mass cancelling client specified group of orders. 2.1.2.3 – Group ID of the order can be amended. 6.4.3 – Introduced the new mass cancellation types 56, 57 and the new field 'Group ID' in Order Mass Cancel Request. 6.4.7 – Introduced the new mass cancellation types 56 and 57 in Order Mass Cancel Report. 6.4.1, 6.4.4 & 6.4.5 – Introduced the new field 'Group ID in New Order, Order Cancel/Replace and Execution Report 2.12, 6.4.5, 6.5.5 – Clarified which of the fields is the Trading Venue Transaction Identification Code (TVTIC), unique ID to identify the trade 6.4.5 & 6.5.5 – TypeOfTrade = 2 for aggressive side of trade, RFQ trades and auction trades.
12.0	5 June 2019	2.2 – Updated Quote handling to refer to section 7.0 for process flow diagrams relating to quote handling 6.1.3.2 – Updated Quote Ack definition as follows – Indicates an acknowledgement of a new or modified RFQ Quote to the Market Maker 6.5.1.1 & 6.5.1.2 – Specified that the PartyRole = 100 is not valid for RFQ Quotes 6.5.3 – Included the limitation on stamping only the Bid ID for dual sided normal/RFQ Quote rejections at the matching engine for Quote Status Report

Issue	Date	Description
		6.5.5 – AvgPx(6) included in the Quote Execution Report for LSEG for RFQ quotes and RFQs 6.5.5 – Added new field ContraOrderBook (33007) to Quote Execution Report 6.5.6.2 – Added new field AutoRFQExecStrategy (33006) to the Quote Request 6.5.6.2 – Added new field NumOfCompetitors (1913) to the Quote Request 6.5.7.1 – Corrected typo on QuoteRequestRejectReason (658) where the field was specified as mandatory 6.5.8 – Included the limitation on stamping only the Bid ID for dual sided normal/RFQ Quote rejections at the matching engine for Quote Ack 6.5.8 – Updated AW = Quote Request Reject 6.5.9.1 – Updated QuoteRespType change 'Cancelled' (11) to 'End Trade' (7) 6.5.9.2 – Updated QuoteRespType – Removed 'End Trade' (7)
12.1	12 July 2019	6.4.5, 6.5.5 – LastMkt (30) tag is added to the Execution Report
12.2	2 August 2019	6.5.5 – Price tag will not be populated in the Execution Report sent for an RFQ 6.5.5 – Included OrdType (40) – 1 (Market) in the quote Execution Report for RFQs 6.5.6.1 – RFQ Disclose side updated to specify – 1 (Disclose) is not allowed for Auto RFQ Execution Strategy 'Sub LIS Auction RFQ with Order Book Sweep'
12.3	11 October 2019	6.4.5, 6.5.5 LastMkt (30) – Description is updated to state 'The value in this field should be disregarded if Exec Type is not Trade (F)'
13.0	25 March 2020	2.1.1 – Offset order type was added 2.1.1.2 – Example for Offet order was added 2.1.2.3 – Clarification added on what amendments are not allowed 6.4.1 – OrderType (40) – New Value F (Offset) was added 6.4.1 – Offset (27018) – New tag was added 6.4.4 – Offset (27018) – New tag was added 6.4.4 – Price (44) – Clarification was added on how this tag should be populated for the offset (OrdType=F) orders. 6.4.5, 6.5.5 – TypeOfTrade (20000) – The description was updated to specify the behaviour during sessions other than continuous trading/CPX. 6.4.5 – OrigClOrdID (41) – The description was updated to clarify that the field will not be stamped in case of cancellation performed by Market Operations on behalf of client. 6.4.5 – Offset (27018) – New tag was added 6.4.5 – Price (44) – Clarification added on how this tag should be populated for offset (OrdType=F) orders. 6.5.9.1 – QuoteRespType (694) – New value (102) added for the Requestor to make RFQ quotes public 6.5.9.1 – Price (44) – Tag is corrected to 44. Clarification of the usage of this tag added. 6.5.9.2 – QuoteRespType (694) – New value 'Executable' (101) added to inform Market Makers that RFQ quotes are now executable; Missing value (100) added. 6.5.2 – OrderBook (30001) – Description updated for the absence of the field. 6.5.2 – RFQID (30006) – Description updated to clarify that the OrderBook field will be ignored for single cancellations with the RFQID specified. MITCH is replace with GTP throughout the document.
13.1	3 July 2020	2.1.2.3 – Section corrected to remove reference to amendment from fully visible to iceberg and vice versa, such amendment is allowed.

Issue	Date	Description
14.0	17 July 2020	**LSEG Release 9.5.9** 6.4.5, 6.5.5 – DecimalTVTIC (27020) – New tag added 6.4.5, 6.5.5 – Trade Match ID – TVTIC (880) – Description updated to clarify that base 10 format will be available.
14.1	21 January 2021	**LSEG Release 9.6.0** 6.5.6.1 – MarketMakerRank (27019) – New tag added 6.4.1, 6.5.1.1, 6.5.6.1 – Note added for X-Clear customers that they should not use more than 16 characters in ClOrdID (11), QuoteMsgID and QuoteReqID as the longer value will be truncated by CCP. 6.5.1.1 – Correction that QuoteMsgID is mandatory for client initiated quote.
14.2	24 March 2021	**LSEG Release 9.6.0** 6.5.6.1 – MarketMakerRank (27019) tag has been removed as the go-live is postponed to the future release.
15	16 July 2021	**LSEG Release 9.6.12** Field description updated with character usage 6.4.1, 6.4.4 – Account 6.4.1,6.4.4,6.4.8 – ClOrdID 6.5.1.1, 6.5.6.1 – QuoteMsgID 2.2.2.1 – Additional details have been included to describe the updating of quotes 2.8 – Description has been corrected
15.1	2 September 2021	**LSEG Release 9.6.12** Field description has been further updated to clarify that ASCII (0) is a valid character to use. 6.4.1, 6.4.4 – Account 6.4.1,6.4.4,6.4.8 – ClOrdID 6.5.1.1, 6.5.6.1 – QuoteMsgID 6.5.6.1 – MarketMakerRank has been added
15.2	2 March 2022	6.4.1 – Added clarity to TIF field
15.3	13 July 2022	6.5.8 – Updated typo in Description field of tag 35
15.4	25 July 2022	6.5.3 – QuoteMsgID (1166) is corrected from Mandatory to Optional (as it is not relevant to QSR sent upon RFQ request) 6.5.6.1 – QuoteReqID (131) – description is updated to remove X-clear related limitation in 16 charcters as this field supports 10 characters only.
15.5	11 August 2022	2.14, 6.5.6 – Enum values have been corrected for Quote Request type. 2.2.3.4 – New section has been added to describe the limitation of max length for QuoteReqID.
16.0	12 May 2023	2.2, 2.2.2.2 – Description has been updated to describe single sided RFQ Quote submission and cancellation. 6.5.2 – tags 298 and 30006 have been updated to reflect cancellation of single sided RFQ Quotes. 6.5.5 – tag 38 has been updated to add clarity to how Order Qty is calculated for EQ.
17.0	12 January 2024	References to Cross/BTF orders removed as this order type is currently unavailable in production: Section 2.1.1, 2.1.2.1, 2.1.2.2, 2.1.2.3, 2.3.15, 2.4.2, 2.5.2, 2.8, 2.10.19, 2.13.4, 3.6, 6.1.2, 6.2.1, 6.4.5, 6.4.7, 6.4.8, 6.4.9, 7.3, 7.3.1, 7.3.2, 7.3.3, 7.1.2, 7.1.3, 7.1.4, 7.1.5, 7.1.6, 7.1.7, 7.1.8

Issue	Date	Description
		2.13.4, 6.5.5 – references to SIZE flag for RFQ is removed as this is not populated for RFQs. Release 1.23.3.0 changes 6.5.6, 6.5.9.1, 6.5.9.2 – Limit price description updated to reflect that RFQ is pegging to far touch when price is not specified. As mentioned in the Service Announcement this functionality will be deployed on a later date. 6.4.5, 6.5.5 – Tag 828 (TrdType) is added.
18.0	11 September 2024	Release 1.23.3.0 changes (16 Sept 2024) As mentioned in the Service Announcement in June 2024, enablement of Far touch pegging for un-priced RFQs.
19.0	01 August 2025	6.4.5 - New value added to Last Market field (Tag 30).
20.0	07 October 2025	The following FIX trading messages will have the new AppID (Tag 1180) of 4 added. 1. Order Mass Cancel Report 2. Mass Quote Acknowledgement 3. Quote Request Reject (RFQ) 4. Quote Ack (RFQ) 5. Quote Response (RFQ)
21.0	05 March 2026	2.6, 2.13.1 The granularity of Transact Time (60) has been updated to nanoseconds. 2.1.1, 2.1.4, 6.4.1, 6.4.5 New TIFs AVD and AVC have been added. 6.4.1, 6.4.5, 6.5.1.1,6.5.5 Execution Instruction for trading against pegged orders has been added. 6.4.1, 6.4.5 Owner Type has been added. 6.4.5, 6.5.5 New Value XLOX has been added to the Last Market field. 2.13.4 Section renamed to Waiver flags from Pre-trade Waiver flags. New information added about RFPT flag. 6.4.5 Tag 2670 has been updated to include a new value for RFPT. 2.1.1 Additional clarification has been added about existing order types GTD, GTT, GFA and GFS.
21.1	04 August 2026	6.4.1, 6.5.1.1 The description of Pegged Exec Inst has been updated.

Within this document, where amendments have been made to the previous version, these changes will be identified by highlighting the text in Red.

1.5 Enquiries

Please contact either the Technical Account Management Team or your Technical Account Manager if you have any functional questions about the Millennium Exchange services outlined in this document. Client Technology Services (UK) can be contacted at:

- Telephone: +44 (0)20 7797 3939
- Email: londontam@lseg.com

2.0 Service description

2.1 Order handling

2.1.1 Order types & validity types

Clients may submit the order types outlined below via the New Order – Single message

Order Type	Description	Relevant FIX Tags
Market	An order that will execute at the best available prices until it is fully filled. Any remainder will be expired.	OrderType (40) = 1
Limit	An order that will execute at or better than the specified price. The remainder, if any, is added to the order book or expired in terms of its TimeInForce (59).	OrderType (40) = 2 Price (44)
Stop	A market order that remains inactive until the market reaches a specified stop price.	OrderType (40) = 3 StopPx (99)
Stop Limit	A limit order that remains inactive until the market reaches a specified stop price.	OrderType (40) = 4 StopPx (99) Price (44)
Fixed Peak Iceberg	An order that contains a disclosed quantity which will be the maximum quantity displayed in the order book. Once the displayed quantity is reduced to zero, it will be replenished by the lower of the disclosed quantity and the remainder.	DisplayQty (1138) OrderQty (38)
Random Replenished Iceberg	An order that contains a disclosed quantity which will be the maximum quantity displayed in the order book. Once the displayed quantity is reduced to zero, the replenishment quantity will be randomly determined within a pre-defined percentage	DisplayQty (1138) OrderQty (38) DisplayMethod (1084) = 3
Hidden	An order that contains no displayed quantity.	DisplayQty (1138) = 0 DisplayMethod (1084) = 4 (optional)
Pegged	A hidden order pegged to the mid-point of the best bid and offer price for the instrument. It may be configured by the user with a Limit Price and/or a Minimum Execution Size (MES).	OrderType (40) = P Price (44) MinQty (110)
Named	An order for which the identity of the submitting member is disclosed in the pre-trade market data feed.	PreTradeAnonymity = N
Offset	An order with ATC TIF that will execute at or better than the specified price during Closing Auction.The price should be specified as an offset (in basis points) to the Dynamic Reference price and will be calculated at the point of electing the order to the book. Positive offset denotes aggressive pricing on the DRP and negative offset, conservative pricing on the DRP. Zero offset will be priced at DRP. See the example in section 2.1.1.2 If both Hard Limit Price (44) and Offset (27018) are specified in the order, the conservative price between the two will be used.	OrdType (40) = F Offset (27018) Price (44) is optional

Validity Type	Description	Relevant FIX Tags
Day	An order that will expire at the end of the day.	TimeInForce (59) = 0
Immediate or Cancel (IOC)	An order that will be executed on receipt and the remainder, if any, immediately expired.	TimeInForce (59) = 3
Fill or Kill (FOK)	An order that will be fully executed on receipt or immediately expired.	TimeInForce (59) = 4
At the Open (OPG)	An order that may only be executed in the opening auction.	TimeInForce (59) = 2
At the Close (ATC)	An order that may only be executed in the closing auction.	TimeInForce (59) = 7
Good for EDSP Auction (GFX)	An order that may only be executed in the EDSP (Futures and Options Expiry) auction.	TimeInForce (59) = 8
Good for Auction (GFA)	An order that may only be executed in the next auction. If the next auction is the closing auction, it will also participate in the auction volume discovery process that follows.	TimeInForce (59) = 9
Good Till Date (GTD)	An order that will only be expired at the end of trading on the day specified in the order. If the specified day is a non-business day, then the order will expire before start of trading on the next business day. Maximum expiry allowed is date of entry plus 89 calendar days.	TimeInForce (59) = 6 And ExpireDate (432) must be specified.
Good Till Time (GTT)	An order that will only be expired at the time specified in the order. Any GTT orders with an expiry time during any auction call phase will not be expired until after uncrossing has completed and are therefore eligible to participate in that uncrossing. Customers not wishing to take part in a scheduled auction should set the expiry time at least two seconds prior to the scheduled start time. GTT orders timed to expire during CPX trading session will be expired at the prescribed time. Any remaining GTT orders will be expired at the end of trading day.	TimeInForce (59) = 6 And ExpireTime (126) must be specified.
Good for Scheduled Auction (GFS)	An order that may be executed in any scheduled auction during the day with the remaining quantity being carried forward to the next scheduled auction and during the auction volume discovery process that follows. GFS orders will not be triggered during EDSP Auction call.	TimeInForce (59) = C
Closing Price Crossing (CPX)	An order that may be executed at closing price during the closing price crossing session.	TimeInForce (59) = 0 TradingSessionID = a
Auction Volume Discovery (AVD)	An order that may only be executed at closing price during the auction volume discovery uncross that happens immediately after the closing auction.	TimeInForce (59) = D
Auction Volume Discovery & Closing Price Crossing (AVC)	An order that may be executed at closing price during the auction volume discovery uncross and the closing price crossing session.	TimeInForce (59) = E

For further information on the behaviour of types of orders and TIFs, please refer to MIT201 – Guide to the trading system.

2.1.1.1 Order Capacity

Clients are responsible for indicating the capacity an order is submitted under. If a New Order – Single message does not contain the OrderCapacity (528) field, it will be rejected. Further details can be found in section 2.13.3.

2.1.1.2 Price calculation for Offset order

The limit price for offset orders will be calculated as follows

- BUY order (offset is positive): Calculated Price = DRP + DRP * Offset (Decimal form)
- BUY order (offset is negative): Calculated Price = DRP – DRP * Offset (Decimal form)

- SELL order (offset is positive): Calculated Price = DRP – DRP * Offset (Decimal form)
- SELL order (offset is negative): Calculated Price = DRP + DRP * Offset (Decimal form)

Example

DRP = 200

Offset (in Basis point)	Percentage form	Decimal form	Calculated price (BUY)	Calculated price (SELL)
1	0.01 %	0.0001	= 200 + (200*0.0001)= 200.02	= 200 – (200*0.0001) =199.98
0	0	0	200	200
-1	-0.01 %	-0.0001	= 200 – (200*0.0001)= 199.98	= 200 + (200*0.0001) =200.02

2.1.2 Order Management

2.1.2.1 Cancellation

The remainder of a live order may be cancelled via the Order Cancel Request message. The server will respond with an Execution Report or Order Cancel Reject to confirm or reject the cancellation request respectively.

In a scenario where the Order Cancel Request message is submitted by a different user than the user who submitted the original order, the Execution Report will be sent to the cancelling user. If the user cancelling the order does not have permissions to cancel orders on behalf of the firm, the cancel request will be rejected.

The client should identify the order being cancelled by either its OrigClOrdID (41) or OrderID (37). If an Order Cancel Request contains values for both OrigClOrdID (41) and OrderID (37), the server will only process the OrderID (37).

If an order submitted under a different SenderCompID (49) is being cancelled, the Order Cancel Request should include its OrderID (37).

.

The client should identify the order being cancelled by providing the OrigClOrdID (41).

2.1.2.2 Mass Cancellation

A client may mass cancel live orders via the Order Mass Cancel Request message. The server will respond with an Order Mass Cancel Report to indicate, via the MassCancel Response (531) field, whether the request is successful or not.

If the Mass Cancel Request is accepted, the Order Mass Cancel Report will be sent first. The server will then immediately transmit Execution Reports for each order that is cancelled and Order Cancel Rejects for each order that could not be cancelled. The ClOrdID (11) of all such messages will be the ClOrdID (11) of the Order Mass Cancel Request.

In a scenario where the Order Mass Cancel Request message is submitted by a different user than the user who submitted the original orders, the Execution Reports will be sent to the submitted user, whereas the Order Mass Cancel Report will be sent to cancelling user. If the user attempting to mass cancel orders does not have permissions to cancel orders on behalf of the firm, the Mass Cancel Request will be rejected.

If the Mass Cancel Request is rejected, the reason will be specified in the MassCancelReject Reason (532) field of the Order Mass Cancel Report.

Clients may use the Order Mass Cancel Request to mass cancel all orders or only those for a particular instrument, segment, or client specified group of orders. A Mass Cancel Request may apply to all the orders of the member or only to those of a particular Trader Group. Clients are required to specify the trading party when an Order Mass Cancel Request is submitted. The FIX fields relevant to each of the supported mass cancel combinations are outlined below:

	Target Party	
	Trading Party	**Member**
All Orders	MassCancelRequestType (530) = 7 TargetPartyRole (1464) = 76 TargetPartyID (1462)	MassCancelRequestType (530) = 7 TargetPartyRole (1464) = 1 TargetPartyID (1462)
All Orders for an Instrument	MassCancelRequestType (530) = 1 SecurityID (48) SecurityIDSource (22) = 8 TargetPartyRole (1464) = 76 TargetPartyID (1462)	MassCancelRequestType (530) = 1 SecurityID (48) SecurityIDSource (22) = 8 TargetPartyRole (1464) = 1 TargetPartyID (1462)
All Orders for a Segment	MassCancelRequestType (530) = 9 MarketSegmentID (1300) TargetPartyRole (1464) = 76 TargetPartyID (1462)	MassCancelRequestType (530) = 9 MarketSegmentID (1300) TargetPartyRole (1464) = 1 TargetPartyID (1462)

Quotes and unmatched pre-negotiated trades may not be cancelled via an Order Mass Cancel Request.

2.1.2.3 Amending an Order

The following attributes of a live order may be amended via the Order Cancel/Replace Request message:

- Order quantity
- Disclosed quantity
- Price
- Stop price
- Minimum Execution Size (MinQty)
- Expiration time (GTT orders)
- Expiration date (GTD orders)
- Client reference
- Group ID
- Offset

The following amendments are not allowed:

- Fully visible order to a hidden order
- Hidden order to an iceberg or fully visible order
- Iceberg to a hidden order
- Limit order to an offset order and vice versa

The server will respond with an Execution Report or Order Cancel Reject to confirm or reject the amendment request respectively.

In a scenario where the Order Cancel/Replace Request message is submitted by a different user than the one who submitted the original order, the Execution Report will be sent to the modifying user. If the user amending the order does not have permissions to modify orders on behalf of the firm, the amend request will be rejected.

The client should identify the order being amended by either its OrigClOrdID (41) or OrderID (37). If an Order Cancel/Replace Request contains values for both OrigClOrdID (41) and OrderID (37), the server will only process the OrderID (37).

If an order submitted under a different SenderCompID (49) is being amended, the Order Cancel/Replace Request should include its OrderID (37). If the amendment is successful, the order will be treated as one submitted under the SenderCompID (49) that sent the Order Cancel/Replace Request.

Display Method (Tag 1084) containing Enum 3 will not be populated in the Execution Reports (including instances where a user has specified Display Method (Tag 1084) = 3 in the New Order and Order Cancel/Replace Request).

If a Randomised iceberg order is modified (e.g., to a fully visible order), the display method in the Order Cancel/Replace Request should always equal 3, otherwise the system will reject the order.

You can not amend a fully visible order to be a Random Replenished Iceberg order.

When an order amendment (Order Cancel/Replace message) is rejected, the order ID will be populated in the OrderID field of the Order Cancel Reject message.

An order will lose time priority if its order or disclosed quantity is increased or if its price is amended. A reduction in order, disclosed quantity of an order, or the amendment of its expiration time, expiration date or client reference will not cause it to lose time priority. Clients may not amend orders that are fully filled.

The Stop price of a Stop/Stop Limit order cannot be amended once the order has been injected into the order book.

If the Order Quantity is being amended, then the Disclosed Quantity must also be amended at the same time.

When an order receives one or more fills while an amendment request is in flight, the system will not reject the incoming amendment request. Even if the amendment request has a display quantity greater than the order leaves quantity after the partial fill, it will accept the said amendment request and set the display quantity equal to the leaves quantity.

2.1.3 Order Status

As specified in the FIX protocol, the OrdStatus (39) field is used to convey the current state of an order. If an order simultaneously exists in more than one order state, the value with highest precedence is reported as the OrdStatus (39). The relevant order statuses are given below, from highest to lowest precedence:

Value	Meaning
2	Filled
4	Cancelled
C	Expired
1	Partially Filled
0	New
8	Rejected
9	Suspended

Please refer to Section 8.1.1 for process flow diagrams on the various statuses that may apply to an order.

2.1.4 Execution Reports

The Execution Report message is used to communicate many different events to clients. The events are differentiated by the value in the ExecType (150) field as outlined below:

Exec Type	Usage	Order Status
0	**Order Accepted** Indicates that a New Order has been accepted. This message will also be sent unsolicited if an order was submitted by Market Operations on behalf of the client. This message will also be sent when a parked order is injected and added to the order book without receiving an execution. This message will also be sent when a parked order with time in force GFX/GFS/GFA/ATC/AVD/AVC is un-parked and added to the order book without triggering an execution.	0
8	**Order Rejected** Indicates that an order has been rejected. The reason for the rejection is specified in the field OrdRejReason (103).	8
F	**Order Executed** Indicates that an order has been partially or fully filled. The execution details (e.g., price and quantity) are specified. This message will also be sent when a parked order is injected and receives executions on aggression. This message will also be sent when a parked pegged order is un-parked and receives executions on aggression. This message will also be sent when a parked order with time in force GFX/GFA/ATC is un-parked and receives executions on aggression.	1, 2
C	**Order Expired** Indicates that an order has expired in terms of its time qualifier. This message will also be sent when orders are expired upon entering the order book when the number of orders in the order book is at the maximum allowed level, and/or when the incoming order is configured with the Self Execution Prevention[1] specifying CIO or CRO. This message will also be sent when a Market Order or a Stop Order is expired at the point of aggressing the order book during the Continuous Trading session, if a circuit breaker is breached during that aggression. The reason for the expiration is specified in the Text (58) field.	C
4	**Order Cancelled** Indicates that an order cancel request has been accepted and successfully processed. This message will also be sent unsolicited if the order was cancelled by Market Operations or by the system. In such a scenario the Execution Report will include an ExecRestatementReason (378) of Market Option (8). It will not include an OrigClOrdID (41) and will not be assigned a new Client Order ID.	4
5	**Order Cancel/Replaced** Indicates that an Order Cancel/Replace Request has been accepted and successfully processed.	0, 1

1

- Cancel Incoming Order (CIO), leaves the resting order
- Cancel Resting Order (CRO), allows the incoming order to be executed/rest

Exec Type	Usage	Order Status
D	**Order Cancel/Replace by Market Operations/Restated** This is sent when: (i) Market Operations cancel a trade that previously partially filled the order or quote; ExecRestatement Reason (378) will be Market Option (8). It will not include an OrigClOrdID (41) and will not be assigned a new Client Order ID. (ii) An order price/size is changed by the system without being requested by the participants (iii) There is an iceberg order replenishment, which happens after an aggressing order has fully exhausted first the visible, and then any hidden quantities of passive iceberg orders.	0, 1
H	**Trade Cancel** Indicates that an execution has been cancelled by Market Operations or by clients. An ExecRefID (19) to identify the execution being cancelled will be included.	0, 1
9	**Order Suspended** Indicates that an order has been parked by the system without adding it to the order book. This message will be sent when: (i) An incoming stop or stop limit order is put into the parked state. (ii) An incoming pegged order is put into the parked state. (iii) An incoming order with time in force GFA/GFX/GFS/ATC/AVD/AVC is put into the parked state.	9

It should be noted that the Exchange will generally not amend orders or trades. These events are included in the above table for completeness.

2.1.5 Order and execution identifiers

2.1.5.1 Client Order IDs

The server will not validate each ClOrdID (11) for uniqueness. Clients should comply with the FIX protocol and ensure unique ClOrdIDs across all messages (e.g., New Order – Single, Order Cancel Request, etc…) sent under a particular SenderCompID (49). Given that the server supports GTD orders, clients should also ensure that their ClOrdIDs are unique across trading days (e.g., embed the date within the ClOrdID).

Clients must, in terms of the FIX protocol, specify the ClOrdID (11) when submitting an Order Cancel Request, Order Mass Cancel Request or Order Cancel/Replace Request.

2.1.5.2 Order IDs

The server will use the OrderID (37) field of the Execution Report to keep track of orders within the matching system. Order IDs will be unique across trading days.

In terms of the FIX protocol, unlike ClOrdID (11) which requires a chaining through Cancel/Replace Requests and cancel requests, the OrderID (37) of an order will remain constant throughout its life.

Clients have the option of specifying the OrderID (37) when submitting an Order Cancel Request or Order Cancel/Replace Request.

2.1.5.3 Execution IDs

The server will use the ExecID (17) field to affix a unique identifier for each Execution Report. ExecIDs will be unique across trading days.

2.1.5.4 Order ID tag length.

The system will accept a maximum length of 20 characters. If the ID is longer than 20 characters, it will be rejected. This is valid for the following:

NewOrderSingle – ClOrdID (11)

OrderCancelRequest – OriginalClOrdID (41)

NewOrderSingle – SecondaryClOrdID (526)

NewOrderSingle – ClOrdLinkID (583)

Quote – QuoteMsgID (1166)

2.2 Quote handling

The server supports the submission of firm and executable quotes. A particular trading party may only have one active quote per instrument, with the exception of RFQ Quotes. If the server receives a quote for a trading party that already has an active quote for the instrument, it will treat it as an update to the quote. All firm and executable quotes are considered as named.

Quotes are two-sided (i.e., bid and offer). If one side of a quote fails the validations (e.g., price tick, spread, etc…) of the server, both sides will be rejected. However, if a quote is accepted, it is treated as two separate and independent limit orders. One side of a quote will not be automatically cancelled if the other side is fully filled.

Quotes may be submitted individually via the Quote message. All active quotes will expire at the end of the trading day.

Please refer to section 7.0 for process flow diagrams relating to quote handling.

RFQ Quotes

A trading party may have two independent RFQ quotes per RFQ, one per side. If a second quote is sent for the same side, the server will treat it as an update to the original quote. However, for a single RFQ, a trading party may not have both a dual sided quote and another single sided quote.

2.2.1.1 Acknowledgement

The server will explicitly acknowledge or reject each Quote message via the Quote Status Report message. The QuoteStatus (297) field will indicate whether the quote is Accepted (0) or Rejected (5). If a quote is rejected, the reason will be specified in the QuoteRejectReason (300) field. A Quote Status Report will be sent to the client if a quote is expired.

2.2.1.2 Execution

The Execution Report message is used to notify the client if a quote is executed. The ClOrdID (11) of the message will contain the QuoteMsgID (1166) of the last Quote message that updated the executed quote.

The side, quantity and price fields (i.e., Side (54), LastQty (32), LastPx (31), LeavesQty (151), OrderQty (38), Price (44), etc…) will contain information for the executed side. As the server does not keep track of cumulative quantity for quotes, the value in the field CumQty (14) will be “0”.

2.2.1.3 Cancellation by Market Operations

An unsolicited Quote Status Report will be sent to the client if a quote is cancelled by Market Operations. The QuoteStatus (297) of such a message will be removed from Market (6) and the QuoteMsgID (1166) will be the identifier of the last Quote message used to update the quote entry.

2.2.1.4 Expiration

A Quote Status Report will be sent to the client if a quote is expired. The QuoteStatus (297) of such a message will be Expired (7) and the QuoteMsgID (1166) will be the identifier of the last Quote message used to update the quote entry.

2.2.2 Quote management

2.2.2.1 Updating a quote

A client may update a live quote entry by sending another quote, via the Quote message, for the same instrument. When submitting an update, clients may:

(i) Update both sides of a quote

(ii) Update one side of a quote and leave the other side unchanged

Clients may update a side of a quote by providing a new price and/or quantity. The bid or offer side of a quote will lose time priority in the order book if its quantity is increased or its price is updated. A reduction in quantity will not cause a side to lose time priority.

When one side of a quote is replaced, the Client Order ID is updated for both sides. The Execution Report is sent out only for the amended side.

Note that a quote update request sent via the Order Cancel/Replace message will be rejected.

If the capacity and the account type is amended, the system will not reject the request, but the changes will be ignored and not applied to the quote (the original capacity and the account type will remain). However, if a quote with the filled side is amended, the capacity and account type is updated for the filled side only.

If the TradeID is amended, the trader ID with PartyRole=100 is updated for the filled side only.

2.2.2.2 Cancelling a single quote

A client may use the Quote Cancel message to cancel a single quote entry. The message should include a QuoteCancelType (298) of Cancel for Instruments (1) and a NoQuoteEntries (295) of “1”. The instrument to which the cancellation applies should also be specified. It is necessary to include the NoTargetPartyIDs (1461) block in the message and the TargetPartyRole (1464) should be Trader Group (76).

The server will explicitly acknowledge or reject such a Quote Cancel message via the Quote Status Report message. The QuoteStatus (297) field will indicate whether the quote is Cancelled (17) or whether the quote cancel request is Rejected (5). If a cancel request is rejected, the reason will be specified in the QuoteRejectReason (300) field.

RFQ Quotes

If two independent single-sided RFQ Quotes have been submitted for the same RFQ, then QuoteCancelType (298) field can be set to either Cancel Buy Side (6) or Cancel Sell Side (7) if it is required to cancel only one side along with the Security ID (48). QuoteCancelType (298) of Cancel for Instruments (1) will not be accepted if two single sided RFQ Quotes have been submitted for the same RFQ.

QuoteCancelType (298) (6) or (7) cannot be used to cancel a dual-sided quote.

2.2.2.3 Mass cancelling quotes

The client may also mass cancel quotes via a single Quote Cancel message. The server will respond with a Mass Quote Acknowledgement to indicate, via the QuoteStatus (297) field, whether the request is successful or not.

The Mass Quote Acknowledgement will not contain any quote sets or quote entries if the cancellation of all quotes covered by the request is either confirmed or rejected. If the entire request is rejected, the reason will be specified in the QuoteRejectReason (300) field.

If the cancellations of some quotes are confirmed while those of others are rejected, the Mass Quote Acknowledgement will contain each quote entry that was not cancelled. The QuoteEntryStatus (1167) of each quote entry will be Rejected (5) and the reason the cancellation was rejected will be specified in the field QuoteEntryRejectReason (368). All quote entries will be grouped under a single quote set.

If a mass cancel quote request is submitted after the post close session end, but before the market end, the open quotes will not get cancelled. In this scenario, the server will respond with a Mass Quote Acknowledgement with QuoteStatus (297) of Accepted followed by Quote Status Reports with QuoteStatus (297) of Rejected for each side of open quotes. The reason for rejection will be specified in each Quote Status Report.

Clients may use the Quote Cancel message to mass cancel all quotes or those for a specified list of instruments. If a Quote Cancel is used to cancel quotes for multiple instruments, it may not contain more than 25 entries in the NoQuoteEntries repeating block. A Mass Quote Cancel Request may apply to all the quotes of the member or only to those of a particular Trader Group. It is required to specify the target party when the Quote Cancel is submitted. The FIX fields relevant to each of the supported mass cancel combinations are outlined below:

	Target Party	
	Other Party	**Member**
All Quotes	QuoteCancelType (298) = 4 TargetPartyRole (1464) = 76 TargetPartyID (1462)	QuoteCancelType (298) = 4 TargetPartyRole (1464) = 1 TargetPartyID (1462)
All Quotes for Specified Instruments	QuoteCancelType (298) = 1 TargetPartyRole (1464) = 76 TargetPartyID (1462) NoQuoteEntries (295) = n (<= 25) ➡ SecurityID (48) SecurityIDSource (22) = 8	QuoteCancelType (298) = 1 TargetPartyRole (1464) = 1 TargetPartyID (1462) NoQuoteEntries (295) = n (<= 25) ➡ SecurityID (48) SecurityIDSource (22) = 8

If a Mass Quote Cancellation is requested when there are no open quotes/RFQ quotes in the book, the server will respond with a Mass Quote Acknowledgement with a QuoteStatus (297) of Accepted, while NoQuoteSets (269) will be unset. This behaviour is common when a Mass Quote Cancellation is directed to a partition in which the instrument does not reside.

Orders and unmatched pre-negotiated trades may not be cancelled via a Quote Cancel.

2.2.3 Quote identifiers

2.2.3.1 Message identifiers

The server will not validate each QuoteMsgID (1166) for uniqueness. Clients should comply with the FIX protocol and ensure unique QuoteMsgIDs across all Quote and Quote Cancel messages sent under a particular SenderCompID (49).

2.2.3.2 Entity identifiers

A particular trading party may only have one active quote per instrument. The QuoteID (117) of a Quote should always be “1”.

2.2.3.3 Set identifiers

If the server sends a Mass Quote Acknowledgement in response to a Quote Cancel message, the QuoteSetIDs of the message will be sequential numbers starting at one (1).

2.2.3.4 Quote Request ID tag

The system will accept a maximum length of 10 characters. If the ID is longer than 10 characters, it will be rejected. This is valid for the following:

Quote Status Report – QuoteReqID (131)

Quote Request – QuoteReqID (131)

Quote Request Reject – QuoteReqID (131)

2.3 Security identification

Instruments will be identified using the SecurityID (48) field. Users must also specify the SecurityIDSource (22) field.

2.4 Party identification

ID	Description	Relevant FIX Tags
Member ID	Identifier of the member the interest is submitted under.	PartyRole (452) = 1 PartyIDSource=D PartyID (448)
Trader Group	Identifier of the trader group the interest is submitted under.	PartyRole (452) = 76 PartyIDSource (447)=D PartyID (448)
Trader ID	Identifier of the trader the interest is submitted under.	PartyRole (452) = 100 PartyIDSource (447)=D PartyID (448)
Client Reference	Client reference information applicable to an order.	Account (1)
Counterparty Firm	Identifier of the counterparty firm in a trade.	PartyRole (452) = 17 PartyIDSource=D PartyID (448)
Market Makers	Identifier of the market maker firms to whom a private RFQ is directed.	PartyRole (452) = 66 PartyIDSource (447)=D PartyID (448)
Contra Trader	The trading mnemonic of the contra-side of a privately negotiated RFQ.	PartyRole (452) = 37 PartyIDSource (447)=D PartyID (448)
Executing Trader	Identifier of the Executing Trader relevant to the order/quote or RFQ.	PartyRole (452) = 12 PartyIDSource (447)=P PartyID (448)
Client ID	Identifier of the client of the order/quote or RFQ.	PartyRole (452) = 3 PartyIDSource (447)=P PartyID (448)
Investment Decision Maker	Identifier of the investment decision maker relevant to the order/quote or RFQ.	PartyRole (452) = 122 PartyIDSource (447)=P PartyID (448)

Trading privileges are, depending on how the participant is set up, assigned at the level of the SenderCompID (49), Trader Group or Trader ID.

2.4.1 Trader Group, Trader ID, Counterparty Firm

A member of London Stock Exchange is required to specify a Trader Group. Members of these markets may optionally specify a Trader ID in each message.

Trader Group (PartyRole (452) = 76) must be specified in the New Order – Single, Order Cancel, Order Cancel/Replace and Quote messages. For the New Order Single (D), Order Cancel Request (F), Quote (S) and Order Cancel/Replace Request (G) messages, the message will be rejected if the Trading Party Component does not include a Party ID (448) Tag without a corresponding PartyRole (452) Tag equal to 76 (Trader Group) within the same repeating group.

For rejected messages, the client will receive a Business Message Reject (j) message with the following tags specified:

Business Reject Reason (380) = ‘0’

Text (58) = “Trader Group not specified on message”

The New Order Single (D), Order Cancel Request (F) and Order Cancel/Replace Request (G) messages will be rejected if the Party ID (448) corresponding to the PartyRole (452) of Trade Group (76) is invalid. The rejected messages will be acknowledged with an Execution Report which will have ExecType (8), OrdRejReason (103) = 9100 and Text (58) = Unknown user (Owner ID).

It should be noted that the party block with the invalid Trader Group (76) will not be included in the rejected Execution Report. In a scenario where the request was submitted with multiple party blocks, only the party block with the invalid Trader Group (76) will be dropped from the rejected Execution Report. The other party blocks will be included in the message.

2.4.2 Client ID, Investment Decision Maker, Executing Trader

The participants should provide the short code in the PartyID (448) tag to identify the Client, Investment Decision Maker or Executing Trader in the following messages: New Order Single, Quote, , Quote Request.

A short code must be in the range from 4 to 4294967295.

The below table shows the valid combinations of the Party Role Qualifier and Party Role tags, including the use of reserved Party ID values (0-3). Note; other combinations outside of the ranges below maybe accepted, but this is not advised.

Party identifier	FIX Tags
1. Client – Legal Entity (LEI)	Party Role (452)=3, PartyRoleQualifier (2376)= 23, PartyID (448) = <Short Code>, PartyIDSource (447)=P
2. Client – Natural Person	Party Role (452)=3, PartyRoleQualifier (2376)= 24, PartyID (448) = <Short Code>, PartyIDSource (447)=P
3. An aggregation of multiple client orders	Party ID (448) = 1 (AGGR), Party Role (452)=3, PartyIDSource (447)=P
4. Clients are pending allocation	Party ID (448) =2 (PNAL), Party Role (452)=3, PartyIDSource (447)=P
5. No client for the order	Party ID (448) = 0 (None), Party Role (452)=3, PartyIDSource (447)=P
6. Investment Decision Maker – Natural Person	Party Role (452)=122, PartyRoleQualifier (2376)= 24, PartyID (448) = <Short Code>, PartyIDSource (447)=P
7. Investment Decision Maker – Algorithm	Party Role (452)=122, PartyRoleQualifier (2376)= 22, PartyID (448) = <Short Code>, PartyIDSource (447)=P
8. No Investment Decision Maker	Party ID (448) = 0 (None), Party Role (452)=122, PartyIDSource (447)=P
9. Executing Trader – Natural Person	Party Role (452)=12, PartyRoleQualifier (2376)= 24, PartyID (448) = <Short Code>, PartyIDSource (447)=P
10. Executing Trader is Algorithm	Party Role (452)=12, PartyRoleQualifier (2376)= 22, PartyID (448) = <Short Code>, PartyIDSource (447)=P
11. Executing Trader on behalf of a client	Party ID (448) =3 (CLIENT), Party Role (452)=12, PartyIDSource (447)=P

2.5 Market operations

2.5.1 Interest submission and management

Market Operations is able to submit an order cancel request or quote cancel request on behalf of a client.

The client will be notified of the cancel request submitted on its behalf if it is accepted. The client will not be notified if the action is rejected. If the cancellation is accepted, the disseminated Execution Report will not be assigned a new Client Order ID.

This feature is intended to help a client manage an emergency situation and should not be relied upon as a normal business practice.

2.5.2 Trade cancellations

Market Operations may also cancel any (automatically executed) trade. Additionally, participants may cancel their own trades. Execution Reports will be sent to the relevant clients to notify them of a trade cancellation.

If an execution received by an order is cancelled, the order will be restated to reduce its order quantity by the cancelled quantity. The client will receive two notifications in such a scenario; one for the trade cancel and another for the restatement. The LeavesQty (151) and CumQty (14) of a live order will always add up to its OrderQty (38).

If an execution received by a quote is cancelled, the cancelled quantity will always be cancelled. The side of the quote will be restated to reduce its order quantity by the cancelled quantity. The client will receive two notifications in such a scenario; one for the trade cancel and another for the restatement. The LeavesQty (151) and CumQty (14) of one live side of a quote will always add up to its OrderQty (38).

An unsolicited Quote Status Report will be sent to the client if a quote is cancelled by Market Operations. The QuoteStatus (297) of such a message will be Removed from Market (6) and the QuoteMsgID (1166) will be the identifier of the last Quote message used to update the quote entry.

2.6 Timestamps and dates

The matrix below clarifies the expectations for timestamps and dates.

FIX Tag	Client Generated tag – accepted format	Server Generated tag – sent format
SendingTime (52)	UTC, YYYMMDD-HH:MM:SS.uuuuuu and YYYYMMDD-HH:MM:SS.sss	UTC, YYYYMMDD-HH:MM:SS.uuuuuu
OrigSendingTime (122)		
TransactTime (60)	UTC, YYYYMMDD-HH:MM:SS.uuuuuuuuu YYYYMMDD-HH:MM:SS.uuuuuu and YYYYMMDD-HH:MM:SS.sss	UTC, YYYYMMDD-HH:MM:SS.uuuuuuuuu
ExpireTime (126)	UTC, YYYYMMDD-HH:MM:SS	
ExpireDate (432)	YYYYMMDD, specified in the local date for the server (i.e., not in UTC).	

2.7 Repeating groups

If a repeating group (Components/Component Block) is used in a message, the NoXXX field (for example, NoPartyIDs field in the trading party repeating group) should be specified first, before the repeating group starts. This is applicable for both the messages generated by the client and by the server.

The messages generated by the server will have the fields within a repeating group in order.

The messages generated by a client should have the first field in a repeating group in order. If the first field in a repeating group is in order, a message generated by a client will be accepted; otherwise the message will be rejected.

In case the client specifies duplicate repeating groups, only the last entry will be considered by the system. The server will not reject such messages.

2.8 Auto Cancel on Disconnect

When a client has enabled “Mass Cancel on Disconnect” and/or “Mass Cancel on Logout”, client’s orders and quotes will be cancelled upon disconnection or a log out respectively.

On a subsequent successful login, the client will receive the Execution Report messages for cancelled orders, but will not receive a Quote Status Report for cancelled quotes.

. At the request of the participant, the server can be configured to automatically cancel all live orders and quotes submitted under a CompID whenever it disconnects and/or logs out from the server.

This feature does not guarantee that all outstanding orders will be successfully cancelled, as executions that occur very near the time of disconnect may not be reported to the client. During such a situation, the client should contact market operations to verify that all orders have been cancelled and all *Execution Reports* have been received.

The configuration of the mass cancellation on disconnect feature may be updated during a FIX session.

If the disconnection is initiated by the server (e.g., when a user is locked, when a user is force logged out, when the maximum message rate is exceeded), the server first logs out the user before severing the connection. In such a scenario the *Auto Cancel on Logout* feature will be applicable, where as if the disconnection is initiated by the client (e.g., Heartbeat expiration, when a message is sent with an invalid sequence number), the applicable feature will be *Auto Cancel on Disconnect*.

2.9 Generating Reject Messages

A session reject message will be sent by the server if a required tag or a conditionally required tag is missing in a message sent by a client.

If an unsupported value is sent within a tag, an Execution Report or an order cancel reject is sent by the server.

2.10 Functional & Implementation Limitations

2.10.1 As an exception to 2.9, a session reject message can also be generated for an unsupported value. This can happen if the FIX tag supports a different data type compared to the internal field (for example, if an invalid capacity is sent with a New Order message, a session reject will be sent, but if an invalid account type is sent, an Execution Report message will be sent).

2.10.2 Quote Type (537) will not be populated in a Quote Status Report that has been generated as a response for rejecting a Quote Cancel due to a duplicate quote message ID.

2.10.3 When a cancellation or amendment to a “Filled” or “Cancelled” or “Expired” order is rejected, order status is given as “Rejected” in the Order Cancel Reject instead of the actual status of the order.

2.10.4 As an exception to 2.9, when a quote is rejected due to an invalid quote type, a Reject is given rather than a Quote Status Report.

2.10.5 Order Status (39) can be “Rejected” in the Execution Report and Order Cancel Reject if the order is unknown or the cancellation or amendment request cannot be processed anymore. There are some basic validations that need to be passed to process an order. If those validations fail, an order will not be processed anymore, hence some of the actual information of the order will not be stamped in the messages generated by the server. For example, an amend request to change the Order Quantity (38) or Display Quantity (1138) to a negative value will be rejected via a Order Cancel Reject with the Order Status (39) as “Rejected”.

2.10.6 The order status will be communicated as “Expired” if an order is cancelled in the case of MASS CANCEL ON LOGOUT/MASS CANCEL ON DISCONNECT after the user logs out/disconnects, if the appropriate setting is turned on.

2.10.7 Within a client generated message, if the same FIX tag has been repeated with different values, the server takes the value in the last tag. The server will not reject such messages.

2.10.8 If the value Trader Group (76) has been repeated with the PartyRole (452) in the Trading Party Component Block in a client generated message, the value in the last Party ID (448) (which is corresponding to the last PartyRole (452)) is taken as the ID of the Trader Group. The server will not reject such messages.

2.10.9 If the client tries to amend the order quantity or the display quantity in the New Order message, and if the request cannot be completely fulfilled due to edge conditions, the server will do the amendment to the maximum possible extent. The server will not reject the amend request.

For example, if an order is sent with the order quantity and display quantity as 800, and then tries to amend the display quantity to 500, two scenarios can happen:

(a) The user may have already received a partial fill for 400 and tries to amend the leaves quantity via the display quantity, which is not permitted, or

(b) While the amend request is on the wire, there may be a partial fill of 400 which is not known to the user at the point of generating the amend request; in this case, rejecting the amend request is not ideal.

The server cannot differentiate the two scenarios, hence it has implemented a fairer option, which is to execute the amend request to the maximum possible extent.

2.10.10 The server does not keep track of filled/cancelled/expired/rejected orders or quotes (i.e., it does not keep track of orders or quotes whose life cycle is over). It is also not possible to find whether there are active quotes for a particular instrument or not; hence the server does not reject a Mass Quote Cancel request in total just because there are no quotes for a particular user + instrument combination; the rest of the user + instrument combinations may have valid open quotes.

Due to the above behaviour and limitations, when a Mass Quote Cancel is sent, the server will try to cancel all the quotes requested. If a quote cannot be cancelled because it is already filled/cancelled/expired/rejected, the quote set repeating group will not be populated for those quotes in the Mass Quote Acknowledgement, as server does not have information of those quotes.

2.10.11 It is not possible to publish the TotalAffectedOrders (533) field in the Order Mass Cancel Report if the system sends the Order Mass Cancel Report before the Execution Reports (for orders that are cancelled) or Order Cancel Rejects (for orders that are not cancelled).

2.10.12 At present, if an order/quote Mass Cancel Request is sent for instruments that are in multiple matching partitions, an Order Mass Cancel Report or Mass Quote Acknowledgement (depending on whether the request is for order or quotes respectively) will be sent per matching partition, with the confirmation/rejection of the cancellations of orders/quotes in that respective partition. This is because the system handles Mass Cancel Requests per partition internally. The relevant partition will be stamped in the AppID (1180) field in the Order Mass Cancel Report and Mass Quote Acknowledgement.

2.10.13 An order Mass Cancel Request should not be sent during Start of Trading sessions. If a request is sent, it will be rejected as expected. But thereafter, in a subsequent session, the client will not be able to mass cancel the same orders again. They can, however, individually cancel orders.

2.10.14 The system will ignore an undefined tag sent along with any Administrative message and will process the rest of the message. However, if an undefined tag is sent along with an Application message, the system will completely reject the message.

2.10.15 You cannot amend a fully visible order to a Random Replenished Iceberg order. However, it is possible to amend a fully visible order to a Fixed Peak Iceberg.

2.10.16 If a randomised iceberg order is modified (e.g., to a fully visible order), then the display method in the Order Cancel/Replace Request message should always be equal to three (3), otherwise the message will be rejected.

2.10.17 Passive Only Order functionality is only available for certain instruments. Information on whether Passive Only Order functionality is available for a particular instrument can be found in the Millennium Exchange Business Parameters document.

2.10.18 Cancel on Disconnect is applicable only if the user is disconnected before the end of day. In this case, the user is not disconnected but logged off by the system at EOD.

2.10.20 An order amendment request will be rejected if the Expire Time field is set for GTD orders or the Expire Date field is set for GTT orders, or neither Expire Time nor Expire Date is set for GTD/GTT orders.

2.10.21 A client initiated message with an invalid Party Role (452)/Target Party Role (1464) of Trader Group (76) will be rejected due to an unknown user (reject code 9100 will be sent). The party block with the invalid Trader Group (76) will not be included in the reject response. If a client initiated message has multiple party blocks, the party block with the invalid Trader Group (76) will not be included in the reject response. Party blocks with the correct Trader Group (76) will be included in the message.

2.10.22 The maximum length supported by the system for the field PartyID (448) is 11. Any values greater than 11 will be truncated by the system. After truncating, the system will validate the PartyID, and if the PartyID is invalid, the order will be rejected with reject reason "Unknown user (OwnerID)”

2.11 Mapping Order ID from FIX to GTP

To convert FIX Order ID to GTP Order ID:

Step 1 – Convert the 12 byte FIX Order ID from ASCII into a base 62 equivalent, using the base 62 mapping table (below)

Step 2 – Convert this string into a base 10 (decimal) number

Step 3 – The GTP Order ID is this base 10 number represented in binary

Note

- 64 bit integer data types should be used for the calculation, otherwise integers will overflow.
- Excel also rounds the value since it is using a 64 bit float data type for the calculation.

The Order ID format (ASCII):

12 bytes
0-9, A-Z, a-z
Base 62 encoded Order ID

The base 62 mapping table:

0	0	20	K	40	e	60	y
1	1	21	L	41	f	61	z
2	2	22	M	42	g		
3	3	23	N	43	h		
4	4	24	O	44	i		
5	5	25	P	45	j		
6	6	26	Q	46	k		
7	7	27	R	47	l		
8	8	28	S	48	m		
9	9	29	T	49	n		
10	A	30	U	50	o		
11	B	31	V	51	p		
12	C	32	W	52	q		
13	D	33	X	53	r		
14	E	34	Y	54	s		
15	F	35	Z	55	t		
16	G	36	a	56	u		
17	H	37	b	57	v		
18	I	38	c	58	w		
19	J	39	d	59	x		

An Example:

ASCII Order ID for FIX	004Xj7Wu76ta
Base 62 equivalent	00,00,04,33,45,07,32,56,07,06,55,36
Base 10 (decimal) number	61512470073704470
GTP Order ID	Binary encoding of the above decimal

2.12 Mapping Trade Match ID (TVTIC) to GTP

To convert FIX Trade Match ID to GTP Trade ID:

Step 1 – Convert the 10 byte Trade Match ID from ASCII into a base 36 equivalent using the base 36 mapping table (below)

Step 2 – Convert this string into a base 10 (decimal) number

Step 3 – The GTP Trade ID is this base 10 number represented in binary

The Trade Match ID format (ASCII):

10 bytes
0-9, A-Z
Base 36 encoded trade ID

The Trade Match ID binary format is calculated as follows:

20 bits	2 bits	3 bits	2 bits	24 bits
<number of seconds>	[0-15]	[0-7]	[0-3]	
The number of five min intervals from 1 January 2010)	ID	Partition ID	Thread ID	Trade number

The base 36 mapping table (G offset):

0	G	20	0
1	H	21	1
2	I	22	2
3	J	23	3
4	K	24	4
5	L	25	5
6	M	26	6
7	N	27	7
8	O	28	8
9	P	29	9
10	Q	30	A
11	R	31	B
12	S	32	C
13	T	33	D
14	U	34	E
15	V	35	F
16	W		
17	X		
18	Y		
19	Z		

An Example:

ASCII Trade ID for FIX	G5DIF33YV0
Base 36 equivalent	00,25,33,02,35,23,23,18,15,20
Base 10 (decimal) number	73120274710544
GTP Trade ID	Binary encoding of the above decimal

2.13 MiFID II changes

2.13.1 Timestamping at Microsecond granularity

All server generated timestamps will now be in microsecond granularity, except Transact Time (60) which will be in nanosecond granularity. It is not mandatory for client generated timestamps to be in microsecond granularity. Further details are described in the Timestamps and dates section.

2.13.2 Unique System IDs

The existing BidID and OfferID tags will now be populated for electronic and firm quotes in the Quote Status Report, and for RFQ Quotes in the Quote Ack message.

2.13.3 Order Capacity

The Order capacities are shown below:

Pre-MiFID II name	MiFID II name
Principal	Dealing on own account (DEAL)
Agency	Any other trading capacity (AOTC)
Riskless Principal	N/A
N/A	Matched Principal (MTCH)

Prior to the MiFID II go-live, tag OrderCapacity(528) = R was treated as Riskless Principal. Since the MiFID II go-live, it is treated as Matched Principal (MTCH).

2.13.4 Waiver Flags

2.13.4.1 ILQD

If a RFQ transaction was executed under a pre-trade waiver, the relevant Waiver Flag will be sent in the. Flags will also be sent in the Quote Execution Report for RFQ trades and trade cancellations.

The matrices below show in which scenario each of the flags will be sent.

RFQ Trades/ Trade Cancels	Instrument Category		Liquidity		Pre-Trade Transparency Model of the RFQ	Waiver Indicator Flag
	Equity	Non-equity	Liquid	Illiquid	NPT	
		✓		✓	✓	ILQD

2.13.4.2 RFPT

All mid-priced executions taking place on the Secondary Execution Venue (XLOX) will use the Reference Price Waiver flag (RFPT).

2.13.5 Order Record Keeping Information

The participants should provide the short code with PartyRole (452) = ‘Client ID (3)’, ‘Investment Decision Maker (122)’ or ‘Executing Trader (12)’. These new party identifiers are named as ‘Client ID’, ‘Investment decision within firm’ and ‘Execution within firm’ in the MiFID II/MiFIR RTS 24 regulatory documentation. Further information about these new party identifiers has been added in the Party identification section.

2.14 RFQ models

The Requestor can submit *Named* RFQ (Manual or Automatic) or *Anonymous* (Manual or Automatic). They can also choose whether to send an RFQ to a *selected* list of Market Makers or to *all*.

To submit a given RFQ model, the Requestor should specify the below combination of tags:

Model	QuoteRequestType (303)	Party ID (448) with Party Role (452)= 66
Manual Named RFQ to listed MMs	1 – Manual OR 100 – Manual (Named)	Market Makers Firm IDs
Manual Named RFQ to all MMs	100 – Manual (Named)	Not specified
Manual Anonymous RFQ to listed MMs	101 – Manual (Anonymous)	Market Makers Firm IDs
Manual Anonymous RFQ to all MMs	101 – Manual (Anonymous)	Not specified
Automatic Named RFQ to listed MMs	102 – Automatic (Named)	Market Makers Firm IDs
Automatic Named RFQ to all MMs	102 – Automatic (Named)	Not specified
Automatic Anonymous RFQ to listed MMs	103 – Automatic (Anonymous)	Market Makers Firm IDs
Automatic Anonymous RFQ to all MMs	2 – Automatic OR 103 – Automatic (Anonymous)	Not specified

3.0 Connectivity

3.1 CompIDs

The CompID of each client must be registered with London Stock Exchange before FIX communications can begin. A single client may have multiple connections to the server (i.e., multiple FIX sessions, each with its own CompID).

The CompID of the server is **FGW**. The messages sent to the server should contain the CompID assigned to the client in the field SenderCompID (49) and FGW in the field TargetCompID (56). The messages sent from the server to the client will contain FGW in the field SenderCompID (49) and the CompID assigned to the client in the field TargetCompID (56).

3.1.1 Passwords

Each new CompID will be assigned a password on registration. Clients must change their password to one of their choosing at first login via the Logon message. The new password must comply with London Stock Exchange password policy. The status of the new password (i.e., whether it is accepted or rejected) will be specified in the SessionStatus (1409) field of the Logon sent by the server to confirm the establishment of a FIX connection. The new password will, if accepted, be effective for subsequent logins.

New passwords should adhere to the rules below:

- Minimum length – 8 characters
- Maximum length – 14 characters
- Minimum numeric characters – 1 character
- Minimum alpha characters – 1 character
- Minimum special characters – 1 character

3.2 Production IP addresses and ports

The IP addresses and ports for the FIX gateway are published in a separate configuration document which can found on the Millennium Exchange Technical Information website.

3.3 Failover and recovery

The system has been designed with fault tolerance and disaster recovery technology that ensures that trading should continue in the unlikely event of a process, gateway or site outage.

On unexpected disconnection from the primary gateway, a customer should ensure that their application behaves in accordance with London Stock Exchange's connectivity policy.

In case of a failover, the system will send all messages. If the participant has not logged in to the gateway within the trading day, the gateway will send all available messages upon login.

3.4 Connectivity Policy

An application should attempt to connect a maximum of three times to the primary gateway, with a minimum time out value of three seconds between attempts, before attempting to connect to the secondary gateway – and this should be retried a maximum of a further three times. After six failed connection attempts (three on each gateway) the clients should contact London Stock Exchange for further guidance.

Upon successful connection to the secondary gateway, it is important to note that the system will increment the server side outbound sequence number (i.e., the customer inbound sequence number) by 5,000. Since customers need to comply with FIX Session rules, they should submit a Resend Request (handled by the FIX Session layer) after receiving a response to the login request. This would result in syncing the inbound sequence number on the customer side. In this scenario, there is a low probability that the customer might receive duplicate messages (i.e., messages the customer has already received before the Fail-over). All these duplicate messages will have PossResend(97) field set to "Y". It is expected that the customer will perform a check for duplicate messages with PossResend(97) set "Y". The customer might receive Business Rejects with reject reason 'Application Unavailable' for requests that were submitted during a failover (also low probability). It should be noted that these requests have not been accepted by the system and the customer should resubmit if required.

Information on London Stock Exchange's Connectivity Policy can be found at the following link:

http://www.londonstockexchange.com/products-and-services/technical-library/technical-guidance-notes/technical-guidance-notes.htm

3.5 Message Rate Throttling

London Stock Exchange has implemented a scheme for throttling message traffic where each CompID is only permitted to submit up to a specified number of messages per second.

Additional information is provided in the MIT201 *Guide to the New Trading System* document, and also in the *Trading Technical Parameters* document, both available at: http://www.londonstockexchange.com/products-and-services/technical-library/millennium-exchange-technical-specifications/millennium-exchange-technical-specifications.htm.

Every message which exceeds the maximum rate of a CompID will be rejected via a Business Message Reject (with BusinessRejectReason (380) of Other (0) and Text (58) field = "Message rate exceeded"). A client's connection will be disconnected by the server if its message rate exceeds the maximum rate for a specific time duration. In such a case, the server will transmit a Logout message (with SessionStatus (1409) = 102 (Logout by market operations) and Text (58) = "Maximum Message Rate Exceeded") and five seconds afterwards will terminate the TCP/IP connection.

Please note that client Heartbeat messages, reject messages and any other client-initiated administrative messages are not counted towards the throttling limits.

3.6 Mass Cancellation On Disconnect

At the request of the member firm, the server can be configured to automatically cancel all live orders and quotes submitted under a CompID whenever it disconnects from the server.

This feature does not guarantee that all outstanding orders will be successfully cancelled, as executions that occur very near the time of disconnect may not be reported to the client. During such a situation, the client should contact Market Operations to verify that all orders have been cancelled and all Execution Reports have been received.

If a disconnection/logout takes place after the end of the post close session, it should not result in a mass cancellation of orders. Therefore, if the user gets disconnected/logged out after post close while mass Cancel on Disconnect/Logout is enforced, any orders open at that point will not be cancelled.

The configuration of the mass cancellation on disconnect feature cannot be updated during a FIX session.

4.0 FIX connections and sessions

4.1 Establishing a FIX connection

FIX connections and sessions between the client and server are maintained as specified in the FIX protocol.

Each client will use the assigned IP address and port to establish a TCP/IP session with the server. The client will initiate a FIX session at the start of each trading day by sending the Logon message. The client will identify itself using the SenderCompID (49) field. The server will validate the CompID, password and IP address of the client.

Once the client is authenticated, the server will respond with a Logon message. The SessionStatus (1409) of this message will be Session Active (0). If the client's Logon message included the NewPassword (925) field and the client is authenticated, the server will respond with a Logon message. The SessionStatus (1409) of this message will be Session Active (0).

The client must wait for the server's Logon response before sending additional messages. If the client sends messages prior to sending the Logon message or prior to receiving the Logon response, the server will break the TCP/IP connection with the client without sending any message.

When the client sends a logon with a sequence number higher than expected by the FIX Gateway, the FIX Gateway will send a Resend Request.

If a logon attempt fails because of an invalid SenderCompID, invalid TargetCompID, invalid IP address, invalid password or not having the appropriate privileges to login to the gateway, or if the user sends a Logon message with duplicated tags, the server will break the TCP/IP connection with the client without sending a Logout or Reject message. If, during a logon of a SenderCompID, the server receives a second connection attempt while a valid FIX session is already underway for that same SenderCompID, the server will break the TCP/IP connection with the second connection without sending a Logout or Reject message. As the logon attempt failed, the server will not increment the next inbound message sequence number expected from the client.

If a logon attempt fails because of a locked CompID or if logins are not currently permitted, the server will send a Logout message and then break the TCP/IP connection with the client. In both these scenarios, the next inbound sequence number expected from the client and the outbound sequence number will not be incremented. The message sequence number '1' will be sent with the Logout message.

If a logon attempt fails because of a session level failure (e.g., due to invalid EncryptMethod or DefaultApplVerID, etc...) both the inbound sequence number and the outbound sequence, number will not be incremented. The message sequence number '1' will be sent with the Logout message.

However, if a session level failure occurs due to a message sent by a client which contains a sequence number that is less than what is expected and the PossDupFlag (43) is not set to "Y", then the server will send a Logout message and terminate the FIX connection. In this scenario, the inbound sequence number will not be incremented, but the outbound sequence number will be incremented.

If, during a logon of a SenderCompID, the server receives a second connection attempt via the same TCP/IP connection while a valid FIX session is already underway for that same SenderCompID, the server will immediately break the TCP/IP connection with the client without sending any messages. If the server receives another connection attempt from the same SenderCompID while a session is already established, the connection attempt will be rejected via a Reject message without breaking the existing TCP/IP connection with the client. The server will increment the next inbound message sequence number expected from the client, as well as its own outbound message sequence number.

A protection mechanism is in place in order to protect the gateway from rapid login/logouts. If a user reaches the thresholds for rapid login/logouts, any future login/logouts will be delayed exponentially.

The impact of logon failures on sequence numbers is summarised in the table below:

Reason for Logon Failure	Session status (of logout)	Inbound Sequence Number	Outbound Sequence Number
Invalid or expired password	8 (password expired)	Does not increase	Does not increase (defaulted to 1)
Locked/suspended/ inactivated CompID	6 (account locked)	Does not increase	Does not increase (defaulted to 1)
Logins are not currently permitted	7 (logins are not allowed)	Does not increase	Does not increase (defaulted to 1)
Session level failure (e.g., due to invalid EncryptMethod or DefaultApplVerID, etc...)	101 (logout session level failure)	Does not increase	Does not increase (defaulted to 1)
Login sequence number is less than the expected sequence number	101 (logout session level failure)	Does not increase	Incremented by 1
Second connection attempt	- (Blank as Reject message used instead.)	Incremented by 1	Incremented by 1

4.2 Maintaining a FIX session

4.2.1 Message sequence numbers

As outlined in the FIX protocol, the client and server will each maintain a separate and independent set of incoming and outgoing message sequence numbers. Sequence numbers should be initialised to one (1) at the start of the FIX session and be incremented throughout the session.

Monitoring sequence numbers will enable parties to identify and react to missed messages and to gracefully synchronise applications when reconnecting during a FIX session.

If any message sent by the client contains a sequence number that is less than what is expected and the PossDupFlag (43) is not set to “Y”, the server will send a Logout message and terminate the FIX connection. The Logout will contain the next expected sequence number as well as the received sequence number in the Text (58) field.

A FIX session may not continue to the next trading day. The server will initialise its sequence numbers at the start of each day. The client is expected to employ the same logic.

4.2.2 Heartbeats

The client and server will use the Heartbeat message to exercise the communication line during periods of inactivity and to verify that the interfaces at each end are available. The Heartbeat interval will be the HeartBtInt (108) specified in the client’s Logon message.

The server will send a Heartbeat anytime it has not transmitted a message for the Heartbeat interval. The client is expected to employ the same logic.

As a safety mechanism, the system will not allow the user to login if the HeartBtInt is set to "0". Therefore, if the server receives a logon with HeartBtInt = 0, the user will receive a logout message with SessionStatus = 101 (Logout due to session level failure) and Text = ‘HeartBtInt should be greater than zero’.

If the server detects inactivity for a period longer than the Heartbeat interval plus a reasonable transmission time, it will send a Test Request message to force a Heartbeat from the client. If a response to the Test Request is not received within a reasonable transmission time, the server will send a Logout and break the TCP/IP connection with the client. The client is expected to employ similar logic if inactivity is detected on the part of the server.

4.2.3 Increasing expected sequence number

The client or server may use the Sequence Reset message in Gap Fill mode if it wishes to increase the expected incoming sequence number of the other party.

The client or server may also use the Sequence Reset message in Sequence Reset mode if it wishes to increase the expected incoming sequence number of the other party. The Sequence Reset mode should only be used to recover from an emergency situation. It should not be relied upon as a regular practice.

4.3 Terminating a FIX connection

The client is expected to terminate each FIX connection at the end of each trading day before the server shuts down. The client will terminate a connection by sending the Logout message. The server will respond with a Logout to confirm the termination. The client will then break the TCP/IP connection with the server.

All open TCP/IP connections will be terminated by the server when it shuts down (a Logout will be sent). Under exceptional circumstances, the server may initiate the termination of a connection during the trading day by sending the Logout message.

If, during the exchange of Logout messages, the client or server detects a sequence gap, it should send a Resend Request.

4.4 Re-establishing a FIX session

If a FIX connection is terminated during the trading day, it may be re-established via an exchange of Logon messages.

4.4.1 Resetting sequence numbers: Starting a new FIX session

4.4.1.1 Reset initiated by the client

If the client requires both parties to initialise (i.e., reset to 1) sequence numbers, it may use the ResetSeqNumFlag (141) field of the Logon message. The server will respond with a Logon with the ResetSeqNumFlag (141) field set to “Y” to confirm the initialisation of sequence numbers.

A client may also manually inform the service desk that it would like the server to initialise its sequence numbers prior to the client’s next login attempt.

These features are intended to help a client manage an emergency situation. Initialising sequence numbers on a re-login should not be relied upon as a regular practice.

4.4.1.2 Reset initiated by the server

The system has been designed with fault tolerance and disaster recovery technology that should ensure the server retains its incoming and outgoing message sequence numbers for each client in the unlikely event of an outage.

However, clients are required to support a manual request by London Stock Exchange to initialise sequence numbers prior to the next login attempt.

4.5 Matching system failure

In the event of matching system failure, clients will receive a Business Reject Message with a BusinessRejectReason (380) of “4” indicating “Application not available” following order entry.

5.0 Recovery

5.1 Resend requests

The client may use the Resend Request message to recover any lost messages. As outlined in the FIX protocol, this message may be used in one of three modes:

(i) To request a single message. The BeginSeqNo (7) and EndSeqNo (16) should be the same.

(ii) To request a specific range of messages. The BeginSeqNo (7) should be the first message of the range and the EndSeqNo (16) should be the last of the range.

(iii) To request all messages after a particular message. The BeginSeqNo (7) should be the sequence number immediately after that of the last processed message and the EndSeqNo (16) should be zero (0).

The server caches a maximum number of messages transmitted to the client. Clients are unable to use a Resend Request to recover messages not in the server's cache. This cache size is available in the Trading Technical Parameters document that can found on the Millennium Exchange Technical Information website.

5.2 Possible duplicates

The server handles possible duplicates according to the FIX protocol. The client and server will use the PossDupFlag (43) field to indicate that a message may have been previously transmitted with the same MsgSeqNum (34).

5.3 Possible resends

5.3.1 Client-initiated messages

The server does not handle possible resends for the client-initiated messages (e.g., New Order – Single, Quote, etc.) and ignores the value in the PossResend (97) field of such messages.

5.3.2 Server-initiated messages

The server may, in the circumstances outlined in Sections 5.4 and 5.5, use the PossResend (97) field to indicate that an application message may have already been sent under a different MsgSeqNum (34). The client should validate the contents (e.g., ExecID) of such a message against those of messages already received during the current trading day to determine whether the new message should be ignored or processed.

5.4 Transmission of missed messages

The Execution Report, Order Cancel Reject, Order Mass Cancel Report, Quote Status Report, Mass Quote Acknowledgement and Business Message Reject messages generated during a period when a client is disconnected from the server will be sent to the client when it next reconnects. In the unlikely event the disconnection was due to an outage of the server, all such messages will include a PossResend (97) of "Y".

6.0 Message formats

This section provides details on the header and trailer, the seven administrative messages and fifteen application messages utilised by the server. Client-initiated messages not included in this section are rejected by the server via a Reject or Business Message Reject. All fields are encoded using printable ASCII.

6.1 Supported message types

6.1.1 Administrative messages

All administrative messages may be initiated by either the client or the server

Message	MsgType	Usage
Logon	A	Allows the client and server to establish a FIX session.
Logout	5	Allows the client and server to terminate a FIX session.
Heartbeat	0	Allows the client and server to exercise the communication line during periods of inactivity and verify that the interfaces at each end are available.
Test Request	1	Allows the client or server to request a response from the other party if inactivity is detected.
Resend Request	2	Allows for the recovery of messages lost during a malfunction of the communications layers.
Reject	3	Used to reject a message that does not comply with FIXT.
Sequence Reset	4	Allows the client or server to increase the expected incoming sequence number of the other party.

6.1.2 Application messages: order handling

6.1.2.1 Client-initiated

Message	MsgType	Usage
New Order – Single	D	Allows the client to submit a New Order.
Order Cancel Request	F	Allows the client to cancel a live order.
Order Mass Cancel Request	Q	Allows the client to mass cancel: (i) All live orders (ii) All live orders for a particular instrument (iii) All live orders for a particular segment The mass cancel may apply to the orders of a particular trading party or to all orders of the member.
Order Cancel/Replace Request	G	Allows the client to cancel/replace a live order.

6.1.2.2 Server-initiated

Message	MsgType	Usage
Execution Report	8	Indicates one of the following: (i) Order accepted (ii) Order rejected (iii) Order executed (iv) Order expired (v) Order cancelled (vi) Order cancel/replaced (vii) Trade cancel (viii) Order status
Order Cancel Reject	9	Indicates that an order cancel request or Order Cancel/Replace Request has been rejected.
Order Mass Cancel Report	R	Indicates one of the following: (i) Mass order cancel request accepted (ii) Mass order cancel request rejected

6.1.3 Application messages: quote handling

6.1.3.1 Client-initiated

Message	MsgType	Usage
Quote	S	Allows the client to submit a quote or RFQ quote for a single instrument.
Quote Cancel	Z	Allows the client to cancel a quote for a particular instrument. It may also use this message to mass cancel all quotes or those for a specified list of instruments.
Quote Request	R	Allows the Requester to submit an RFQ
Quote Request Reject	AG	Allows the Market Marker to reject the RFQ
Quote Response	AJ	Allows the Requester to execute (accept) a RFQ Quote or initiate an RFQ cancellation

6.1.3.2 Server-initiated

Message	MsgType	Usage
Quote Status Report	AI	Indicates one of the following: (i) Quote/RFQ accepted (ii) Quote rejected (iii) Request to cancel a single quote/RFQ accepted (iv) Request to cancel a single quote/RFQ rejected (v) Quote/RFQ cancelled by Market Operations
Mass Quote Acknowledgement	b	Indicates one of the following: (i) Request to mass cancel quotes accepted (ii) Request to mass cancel quotes rejected

Message	MsgType	Usage
Execution Report	8	Indicates one of the following: (i) Quote executed (ii) Trade cancel
Quote Request	R	Indicates an RFQ sent to the Market Maker
Quote Request Reject	AG	Indicates an RFQ reject to the Requester
Quote Ack	CW	Indicates an acknowledgement of a new or modified RFQ Quote to the Market Maker
Quote Response	AJ	Indicates the status of a quote and RFQ to the Requester and Market Makers
Quote	S	Indicates the RFQ Quote sent to the Requester

6.1.4 Application messages: other

6.1.4.1 Server-initiated

Message	MsgType	Usage
Business Message Reject	j	Indicates an application message could not be processed

6.2 Message Header and Trailer

6.2.1 Message header

Tag	Field Name	Req	Description
8	BeginString	Y	FIXT.1.1
9	BodyLength	Y	Number of characters after this field, up to and including the delimiter immediately preceding the CheckSum.
35	MsgType	Y	Message type.
49	SenderCompID	Y	CompID of the party sending the message.
56	TargetCompID	Y	CompID of the party the message is sent to.
34	MsgSeqNum	Y	Sequence number of the message.
43	PossDupFlag	N	Whether the message was previously transmitted under the same MsgSeqNum (34). Absence of this field is interpreted as Original Transmission (N). **Value** — **Meaning** Y — Possible Duplicate N — Original Transmission
97	PossResend	N	Whether the message was previously transmitted under a different MsgSeqNum (34). Absence of this field is interpreted as Original Transmission (N). **Value** — **Meaning** Y — Possible Resend N — Original Transmission

Tag	Field Name	Req	Description
52	SendingTime	N	Time the message was transmitted. Not required for incoming messages sent by the clients (even if sent by a client, no validation will be done). Required for outgoing messages sent by the server.
122	OrigSendingTime	N	Time the message was originally transmitted. If the original time is not available, this should be the same value as SendingTime (52). Required if PossDupFlag (43) is Possible Duplicate (Y).
1128	ApplVerID	N	Version of FIX used in the message. Required if the message is generated by the server. **Value** – **Meaning** 9 – FIX50SP2
115	OnBehalfOfCompID	N	The ID of the party whose on behalf the message is sent; will only be used in client initiated messages
128	DeliverToCompID	N	The value specified in the OnBehalfOfCompID(115) field will be stamped; Will only be stamped in server initiated messages which are sent in response to the below messages: New Order – Single, Order Cancel Request, Order Cancel/Replace Request, Order Mass Cancel Request, , Quote (Electronic), Quote Cancel, Logon This tag will not be received for RFQ related messages.

6.2.2 Message trailer

Tag	Field Name	Req	Description
10	CheckSum	Y	

6.3 Administrative messages

6.3.1 Logon

Tag	Field Name	Req	Description
Standard Header			
35	MsgType	Y	A = Logon
Message Body			
98	EncryptMethod	Y	Method of encryption. **Value** – **Meaning** 0 – None
108	HeartBtInt	Y	Indicates the Heartbeat interval in seconds.
141	ResetSeqNum Flag	N	Indicates whether the client and server should reset sequence numbers. Absence of this field is interpreted as Do Not Reset Sequence Numbers (N). **Value** – **Meaning** Y – Reset Sequence Numbers N – Do Not Reset Sequence Numbers
554	Password	N	Password assigned to the CompID. Required if the message is generated by the client.

Tag	Field Name	Req	Description	
925	NewPassword	N	New password for the CompID.	
1409	SessionStatus	N	Status of the FIX session or the request to change the password. Required if the message is generated by the server.	
			Value	**Meaning**
			0	Session Active
			3	New session password does not comply with policy.
1137	DefaultApplVerID	Y	Default version of FIX messages used in this session. This value will be validated by the server.	
			Value	**Meaning**
			9	FIX50SP2
Standard Trailer				

6.3.2 Logout

Tag	Field Name	Req	Description	
Standard Header				
35	MsgType	Y	5 = Logout	
Message Body				
1409	SessionStatus	N	Status of the FIX session. Required if the message is generated by the server.	
			Value	**Meaning**
			4	Session logout complete
			6	Account locked
			7	Logons are not allowed at this time
			8	Password expired
			100	Other
			101	Logout due to session level failure
			102	Logout by market operations
58	Text	N	The field will contain the next expected sequence number, as well as the received sequence number, if the server terminated the connection after receiving a sequence number that was less than what was expected. In other cases, the field will contain the reason for logout.	
Standard Trailer				

6.3.3 Heartbeat

Tag	Field Name	Req	Description
Standard Header			
35	MsgType	Y	0 = Heartbeat
Message Body			
112	TestReqID	N	Required if the Heartbeat is a response to a Test Request. The value in this field should echo the TestReqID (112) received in the Test Request.
Standard Trailer			

6.3.4 Test Request

Tag	Field Name	Req	Description
Standard Header			
35	MsgType	Y	1 = Test Request
Message Body			
112	TestReqID	Y	Identifier for the request
Standard Trailer			

6.3.5 Resend Request

Tag	Field Name	Req	Description
Standard Header			
35	MsgType	Y	2 = Resend Request
Message Body			
7	BeginSeqNo	Y	Sequence number of first message in range
16	EndSeqNo	Y	Sequence number of last message in range
Standard Trailer			

6.3.6 Reject

Tag	Field Name	Req	Description
Standard Header			
35	MsgType	Y	3 = Reject
Message Body			
45	RefSeqNum	Y	MsgSeqNum (34) of the rejected message.
372	RefMsgType	N	MsgType (35) of the rejected message.
371	RefTagID	N	If a message is rejected due to an issue with a particular field, its tag number will be indicated.
373	SessionReject Reason	N	Code specifying the reason for the reject. Please refer to MIT801 for a list of reject codes.
58	Text	N	Text specifying the reason for the rejection.
Standard Trailer			

6.3.7 Sequence Reset

Tag	Field Name	Req	Description
Standard Header			
35	MsgType	Y	4 = Sequence Res
Message Body			
36	NewSeqNo	Y	Sequence number of the next message to be transmitted.
123	GapFillFlag	N	Mode in which the message is being used. Absence of this field is interpreted as Sequence Reset (N). **Value** – **Meaning** Y – Gap Fill N – Sequence Reset
Standard Trailer			

6.4 Application messages: order handling

6.4.1 New Order – Single

Tag	Field Name	Req	Description
Standard Header			
35	MsgType	Y	D = New Order – Single
Message Body			
11	ClOrdID	Y	Client specified identifier of the order. The valid range of ASCII characters (decimal) to preserve data integrity and not to cause an issue on CCP side is 0 and 32-126, except: – 35 # (hash) – 47/(forward slash) – 59 ; (semi colon) – 92 \ (back slash) The characters outside of this range will be replaced by LSEG with "-" (hyphen) in Trade Capture Report (Message Type=AE) sent to clients and to CCP/s. X-Clear customers should not use more than 16 characters as a longer value will be truncated by CCP.
453	NoPartyIDs	Y	Number of party identifiers. Will be '4' or '5'.
➡ 448	PartyID	Y	Identifier of the party. Short code in a range from 4 to 4294967295 can be used to identify the Client, Investment Decision Maker or Executing Trader. Value '0' is valid only for Client ID (3) and Investment Decision Maker (452 = 122) party roles and will be rejected when Party Role (452) is set to '12'. Value '1' and '2' are valid only for Client ID (3) party role. Value '3' is valid only for Executing Trader (12). Short Code is valid only for Client ID (3) Investment Decision Maker (122) and Executing Trader (12) party roles **Value** – **Meaning** 0 – None

Tag	Field Name	Req	Description	
			1	AGGR (Aggregated Order)
			2	PNAL (Pending Allocations)
			3	CLIENT
➡ 447	PartyIDSource	Y	Value 'P' is applicable for Client ID (452=3), Investment Decision Maker (452=122) and Executing Trader (452=12) party roles, otherwise Value 'D' is considered.	
			Value	**Meaning**
			D	Proprietary/Custom Code
			P	Short Code
➡ 452	PartyRole	Y	Role of the specified PartyID (448). It is mandatory to provide PartyRole Trader Group (76), Client ID (3), Investment Decision Maker (122) and Executing Trader (12). Trader ID (100) is optional. The value specified in Trader ID (100) will not be validated by the system.	
			Value	**Meaning**
			100	Trader ID
			76	Trader Group
			3	Client ID
			122	Investment Decision Maker
			12	Executing Trader
➡ 2376	PartyRoleQualifier	N	Provides a further qualification for the value specified in the PartyRole (452). Required only if PartyRole (452) is set to 3, 122 or 12 when the PartyID is a short code (i.e., 4-4294967295), otherwise the value will be ignored.	
			Value	**Meaning**
			22	Algorithm
			23	Firm or Legal Entity
			24	Natural Person
			Value '22' is applicable for Investment Decision Maker (122) and Executing Trader (12) party roles. Value '23' is applicable for Client ID (3) party role. Value '24' is applicable for Client ID (3) Investment Decision Maker (122) and Executing Trader (12) party roles.	
Component Block <Trading Session>		N	Identifier of the trading session. Repeating block indicates whether the order is a CPX order or not. Please refer to section 6.7.1. TimeInForce(59) field should not be populated if the order is a CPX order.	

Tag	Field Name	Req	Description
1	Account	N	Client reference information. The valid range of ASCII characters (decimal) to preserve data integrity and not to cause an issue on CCP side is 0 and 32-126, except: – 35 # (hash) – 47/(forward slash) – 59 ; (semi colon) – 92 \ (back slash) The characters outside of this range will be replaced by LSEG with "-" (hyphen) in Trade Capture Report (Message Type=AE) sent to clients and to CCP/s.
48	SecurityID	Y	Identifier of the instrument
22	SecurityIDSource	Y	Identifier of the source of the SecurityID (48) value **Value** – **Meaning** 8 – Exchange Symbol
40	OrdType	Y	Type of the order: **Value** – **Meaning** 1 – Market 2 – Limit 3 – Stop 4 – Stop Limit P – Pegged F – Offset
1091	PreTrade Anonymity	N	Whether the order is anonymous or named. Absence of this field is interpreted as Anonymous (Y). **Value** – **Meaning** Y – Anonymous N – Named
59	TimeInForce	N	Time qualifier of the order. Absence of this field is interpreted as DAY (0) when NoTradingSessions (386) is not specified. **Value** – **Meaning** 0 – DAY 2 – At the Opening (OPG) 3 – Immediate or Cancel (IOC) 4 – Fill or Kill (FOK) 6 – Good Till Date (GTD) 7 – At the Close (ATC) 8 – Good for Intra-Day Auction (GFX)

Tag	Field Name	Req	Description	
			9	Good for Auction (GFA)
			C	Good for Scheduled Auction (GFS)
			D	Auction Volume Discovery (AVD)
			E	Auction Volume Close (AVC)
126	ExpireTime	N	Time the order expires. This must be a time during the current trading day. Required if TimeInForce (59) is GTD (6) and ExpireDate (432) is not specified. If both the ExpireTime (126) and ExpireDate (432) are specified, the message will be rejected. The value specified for this field will be ignored for TIFs other than GTD.	
432	ExpireDate	N	Date the order expires. Required if TimeInForce (59) is GTD (6) and ExpireTime (126) is not specified. The value specified for this field will be ignored for TIFs other than GTD.	
54	Side	Y	Side of the order:	
			Value	**Meaning**
			1	Buy
			2	Sell
38	OrderQty	Y	Total order quantity	
1138	DisplayQty	Y	Maximum quantity that may be displayed. It is mandatory to specify the intended display quantity.	
1084	DisplayMethod	N	**Value**	**Meaning**
			3	Random (randomise value)
			4	Undisclosed (Hidden Order)
			If this is populated with value “4” while a value which is greater than “0” is populated in DisplayQty (1138), the order will be considered as a Hidden (Reserve) Order. If this is populated with value “3” while a value which is greater than “0” and less than the Order Quantity is populated in DisplayQty (1138), the DisplayQty (1138) after replenishment will be random. If blank while a value which is greater than “0” and less than the Order Quantity is populated in DisplayQty (1138), the DisplayQty (1138) after a replenishment will be “fixed peak”	
44	Price	N	Limit price. Required if OrderType (40) is Limit (2) or Stop Limit (4).	
99	StopPx	N	Stop price. Required if OrderType (40) is Stop (3) or Stop Limit (4).	
581	AccountType	Y	Type of account associated with the order:	
			Value	**Meaning**
			1	Client
			3	House
528	OrderCapacity	Y	Capacity of the order:	
			Value	**Meaning**

Tag	Field Name	Req	Description	
			A	Any other trading capacity (AOTC)
			P	Dealing on own account (DEAL)
			R	Matched Principal (MTCH)
60	TransactTime	Y	Time the order was created	
526	SecondaryClOrdID	N	A secondary ID assigned by the trading party	
583	ClOrdLinkID	N	Personal exposure of the trading party	
27010	PassiveOnlyOrder	N	Order level parameter to allow clients to specify that they would like their order to rest prior to execution, with flexibility for visible orders to rest at a specified price level on the book. Passive Only Orders will execute against hidden orders sat within the BBO on order entry. Any fully hidden order will be rejected if it has enum 100, 1, 2 or 3. No passive order validation will be done if field is not stamped or has “0” stamped on it.	
			Value	**Meaning**
			0	No constraint (Default)
			99	Only accept order if it will not match with visible contra order. Otherwise expire order.
			100	Only accept order if setting new visible BBO. Otherwise expire order.
			1	Only accept order if setting new BBO or joining existing BBO. Otherwise expire order.
			2	Only accept order if will be at BBO or within one visible price-point. Otherwise expire order.
			3	Only accept order if will be at BBO or within two visible price-points. Otherwise expire order.
110	MinQty	N	Minimum Execution Size (MES) of an order. A value of zero (0) means no MES. MES is only applicable to pegged DAY/GTT orders. It is not applicable to pegged IOC/FOK orders. If this tag is specified on a non-pegged order, the message will be rejected.	
Component Block <Order Attributes>		N	Please refer to section 6.7.2.	
1724	OrderOrigination	N	Whether the order, quote or RFQ was generated via Direct Electronic Access (DEA) or not. Only the following value can be sent by the customer.	
			Value	**Meaning**
			5	DEA
27017	GroupID	N	The Group ID will be specified at order submission by Traders. Group ID will enable Traders to group their orders during submission. Valid values are numbers from 1 to 255. Users who do not want to make use of this field will leave the optional field set to “0”, or not send the tag.	

Tag	Field Name	Req	Description
27018	Offset	N	Offset to the Dynamic Reference Price (in basis points) for ATC TIF orders. Required if OrdType (40) = F 'Offset'. Zero is a valid offset. Positive offset denotes aggressive pricing on the DRP and negative offset, conservative pricing on the DRP. Zero offset will be priced at DRP. See the example in section 2.1.1.2
27021	PeggedExecInst	N	The instruction for permissioning for any incoming order to trade against mid-priced pegged orders. Any execution generated against a mid-priced pegged order will be on trading venue XLOX. **Value** — **Meaning** 0 — Default If the order is a mid-priced pegged order, it will be eligible for execution against other pegged orders as well as all other orders. If the order is a non-mid-priced pegged order, it will not be eligible for execution against pegged orders. 1 — Where any incoming order is permitted to execute against mid-priced pegged orders in addition to all other order types. If this value is entered for hidden orders, it will be converted to 2 to prevent hidden orders executing with mid-priced pegged orders. 2 — Not permitted to execute against mid-priced pegged orders This option is invalid for mid-priced pegged orders Mid-priced pegged orders with value 2 will be rejected.
522	OwnerType	N	Optional identification (non-public): **Value** — **Meaning** 0 — Default No flag applied. 1 — Retail investor An end retail order that meets the required definition[2] 2 — Retail Liquidity Provider An order that is only permitted to execute against an identified end retail order Value 2 is only permitted for • Mid-Priced Pegged Orders; • Mid-Priced Pegged Limit Orders; • Hidden Limit Orders; or • Orders with an IOC or FOK TIF.
Standard Trailer			

[2] Refer to related documentation for the definition of a retail order.

6.4.2 Order Cancel Request

Tag	Field Name	Req	Description
Standard Header			
35	MsgType	Y	F = Order Cancel Request
Message Body			
11	ClOrdID	Y	Client specified identifier of the cancel request. Should not be prefixed or suffixed with a forward slash, or contain two consecutive forward slashes.
41	OrigClOrdID	N	ClOrdID (11) of the order being cancelled. Required if OrderID (37) is not specified.
37	OrderID	N	Server specified identifier of the order being cancelled. Required if OrigClOrdID (41) is not specified.
48	SecurityID	Y	Identifier of the instrument.
22	SecurityIDSource	Y	Identifier of the source of the SecurityID (48) value. **Value** — **Meaning** 8 — Exchange Symbol
453	NoPartyIDs	Y	Number of party identifiers. The value in this field can be ‘1’ or ‘2’.
➡ 448	PartyID	Y	Identifier of the party. TraderID (PartyRole(452)=100) specified in Order Cancel Request messages are ignored by the system.
➡ 447	PartyIDSource	Y	Required if PartyID (448) is specified **Value** — **Meaning** D — Proprietary/Custom Code
➡ 452	PartyRole	Y	Role of the specified PartyID (448). It is mandatory to have Party Role Trader Group (76). Trader ID (100) is optional. **Value** — **Meaning** 100 — Trader ID 76 — Trader Group
54	Side	Y	Must match the value in the order. Side tag with value Buy or Sell will be ignored for a single sided quote cancellation.
60	TransactTime	Y	Time the order cancel request was created.
Standard Trailer			

6.4.3 Order Mass Cancel Request

Tag	Field Name	Req	Description
Standard Header			
35	MsgType	Y	q = Order Mass Cancel Request
Message Body			
11	ClOrdID	Y	Client specified identifier of Mass Cancel Request. Should not be prefixed or suffixed with a forward slash, or contain two consecutive forward slashes.
530	MassCancel RequestType	Y	Scope of the Mass Cancel Request: **Value** – **Meaning** 1 – Cancel All Orders for Instrument 7 – Cancel All Orders 9 – Cancel All Orders for Segment 56 – Cancel All Orders for Group 57 – Cancel All Orders for instrument for Group By considering the Target PartyRole(1464), the following four combinations of mass cancellation will be formed: **MassCancel RequestType (530)** – **TargetPartyRole (1464)** – **Description** 56 – 1-Member ID – Cancel All Orders for Group for Firm 76-Trader Group – Cancel All Orders for Group for Trader 57 – 1-Member ID – Cancel All Orders for Instrument for Group for Firm 76-Trader Group – Cancel All Orders for Instrument for Group for Trader (This type is not supported and will be rejected)
27017	GroupID	N	The Group ID will be specified at order submission by Traders Group ID to which the order mass cancellation is directed to. This is a conditionally required field when MassCancelRequestType = ‘56’ or ‘57’. Valid values are between 1-255.
48	SecurityID	N	Identifier of the instrument. Required if the scope of mass cancel is for an instrument.
22	SecurityIDSource	N	Identifier of the source of the SecurityID (48) value. Required if SecurityID (48) is specified. **Value** – **Meaning** 8 – Exchange Symbol
1461	NoTargetPartyIDs	Y	Number of parties the mass cancel relates to. Will be either one or two.
➡ 1462	TargetPartyID	Y	Identifier of the party the mass cancel relates to.
➡ 1463	TargetParty IDSource	Y	**Value** – **Meaning** D – Proprietary/Custom Code

Tag	Field Name	Req	Description
➡ 1464	TargetPartyRole	Y	Role of the TargetPartyID (1462). **Value** – **Meaning** 1 – Member ID 76 – Trader Group
1300	MarketSegmentID	N	Identifier of the segment the mass cancel relates to. Required if MassCancelRequestType (530) is Cancel All for Segment (9).
60	TransactTime	Y	Time the Mass Cancel Request was created.
Standard Trailer			

6.4.4 Order Cancel/Replace Request

Tag	Field Name	Req	Description
Standard Header			
35	MsgType	Y	G = Order Cancel/Replace Request
Message Body			
11	ClOrdID	Y	Client specified identifier of the Cancel/Replace Request. The valid range of ASCII characters (decimal) to preserve data integrity and not to cause an issue on CCP side is 0 and 32-126, except: – 35 # (hash) – 47/(forward slash) – 59 ; (semi colon) – 92 \ (back slash) The characters outside of this range will be replaced by LSEG with "-" (hyphen) in Trade Capture Report (Message Type=AE) sent to clients and to CCP/s.
41	OrigClOrdID	N	ClOrdID (11) of the order being amended. Required if OrderID (37) is not specified.
37	OrderID	N	Server specified identifier of the order being amended. Required if OrigClOrdID (41) is not specified.
453	NoPartyIDs	Y	Number of party identifiers. The value in this field will be '1' or '2'.
➡ 448	PartyID	Y	Identifier of the party
➡ 447	PartyIDSource	Y	Required if PartyID (448) is specified **Value** – **Meaning** D – Proprietary/Custom Code
➡ 452	PartyRole	Y	Role of the specified PartyID (448). It is mandatory to have Party Role Trader Group (76). Trader ID (100) is optional. **Value** – **Meaning** 100 – Trader ID 76 – Trader Group If TraderID(100) specified in the message is different to that of the existing order, it will be updated with the newly specified Trader ID.

Tag	Field Name	Req	Description
1	Account	N	Client reference information. The valid range of ASCII characters (decimal) to preserve data integrity and not to cause an issue on CCP side is 0 and 32-126, except: – 35 # (hash) – 47/(forward slash) – 59 ; (semi colon) – 92 \ (back slash) The characters outside of this range will be replaced by LSEG with "-" (hyphen) in Trade Capture Report (Message Type=AE) sent to clients and to CCP/s.
48	SecurityID	Y	Identifier of the instrument.
22	SecurityIDSource	Y	Identifier of the source of the SecurityID (48) value. **Value** — **Meaning** 8 — Exchange Symbol
40	OrdType	Y	Must match the value in the order.
126	ExpireTime	N	Time the order expires. This must be a time during the current trading day. Required if TimeInForce (59) is GTD (6) and ExpireDate (432) is not specified. The value specified for this field will be ignored for non-GTT orders. If this is populated for a GTD Order when the New Order had been submitted without this, then the message will be rejected. If both the ExpireTime (126) and ExpireDate (432) are specified, the message will be rejected. If the New Order message contained the ExpireTime (126), the server requires only the expiry time and not ExpireDate (432) and vice versa.
432	ExpireDate	N	Date the order expires. Required if TimeInForce (59) is GTD (6) and ExpireTime (126) is not specified. The value specified in this field will be ignored if the TIF is not GTD. If both the ExpireTime (126) and ExpireDate (432) are specified, the message will not be rejected. If the New Order message contained the ExpireTime (126), the server processes only the expiry time and ignores ExpireDate (432) and vice versa. If this is populated for a GTD Order when the New Order had been submitted with an ExpireTime (126), then the message will be rejected.
54	Side	Y	Must match the value in the order.
38	OrderQty	Y	Total order quantity.
1138	DisplayQty	Y	Maximum quantity that may be displayed. It is mandatory to specify the intended display quantity.
1084	DisplayMethod	N	Whether the order is a hidden order. **Value** — **Meaning** 3 — Random (randomised value) 4 — Undisclosed (Hidden Order) If this is populated with value "4" while a value which is greater than "0" is populated in DisplayQty (1138), the order will be considered as a Hidden (Reserve) Order. If this is populated with value "3" while a value which is greater than "0" and less than the Order Quantity is populated in DisplayQty (1138), the DisplayQty (1138) after replenishment will be random.

Tag	Field Name	Req	Description
44	Price	N	Limit price. Required if OrderType (40) is Limit (2) or Stop Limit (4). For Order Sub Type = 55 'Offset': If Price was sent in the New order, this field must be specified in the Order/Cancel Replace Request. If Price was not sent in the New order, this field should be empty in the Order/Cancel Replace Request.
99	StopPx	N	Stop price. Required if OrderType (40) is Stop (3) or Stop Limit (4).
60	TransactTime	Y	Time the Cancel/Replace Request was created.
27010	PassiveOnlyOrder	N	Order level parameter to allow clients to specify that they would like their order to rest prior to execution, with flexibility for visible orders to rest at a specified price level on the book. No protection is provided against order execution against hidden orders. A hidden order must be set to a value of either "0" or "99", otherwise it will be rejected. No passive order validation will be done if field is not stamped or has "0" stamped on it. The value set on this field will be ignored unless a price amendment is also done to the order. **Value** — **Meaning** 0 — No constraint (Default) 99 — Only accept order if it will not match with visible contra order. Otherwise expire order. 100 — Only accept order if setting new visible BBO. Otherwise expire order. 1 — Only accept order if setting new BBO or joining existing BBO. Otherwise expire order. 2 — Only accept order if will be at BBO or within one visible price-point. Otherwise expire order. 3 — Only accept order if will be at BBO or within two visible price-points. Otherwise expire order.
110	MinQty	N	Minimum execution size (MES) of an order. A value of zero (0) means no MES. MES is only applicable to pegged DAY/GTT orders. It is not applicable to pegged IOC/FOK order. If unspecified on amend of a pegged order, the system will maintain any previous MES value. If tag is specified on a non-pegged order amend, the message will be rejected.
27017	GroupID	N	Specifies the Group ID of an order. If user does not want to amend the Group ID of the order, it can be set to "0" or the tag is omitted in the message. Zero can be amended to non-zero value. Already grouped order (1-255) cannot be amended to zero.
27018	Offset	N	Offset to the Dynamic Reference Price (in basis points) for ATC TIF orders Required if OrdType (40) = F 'Offset'.
Standard Trailer			

6.4.5 Execution Report

Tag	Field Name	Req	Description
Standard Header			
35	MsgType	Y	8 = Execution Report
Message Body			
17	ExecID	Y	Server specified identifier of the message. This is a 62 base encoded value in ASCII format.
11	ClOrdID	Y	Client specified identifier of the order.
41	OrigClOrdID	N	Will be filled with the actual original client order ID of the order, irrespective of whether OrigClOrdID was specified (valid or invalid value) or not in the Order Cancel or Cancel/Replace Request. This field will not be stamped in case of order cancellation or trade cancellation performed by Market Operations on behalf of client.
37	OrderID	Y	Server specified identifier of the order. This will be a 62 base encoded value in ASCII format. By converting this to binary, this can be mapped with GTP Order ID.
150	ExecType	Y	Reason the Execution Report was generated: **Value** – **Meaning** 0 – New 4 – Cancelled 5 – Replaced 8 – Rejected C – Expired D – Restated F – Trade H – Trade Cancel 9 – Suspended
19	ExecRefID	N	Reference to the execution being cancelled or corrected. Required if ExecType (150) is Trade Cancel (H).
378	ExecRestatement	N	Reason the order was restated. Required if ExecType (150) is Restated (D). **Value** – **Meaning** 3 – Order re-priced (at the start of CPX session) 8 – Market Option: – Order is cancelled by market operations – Trade is cancelled by market operations – On-book trade is cancelled via Post Trade Gateway 100 – Order replenishment (with a new Public Order ID)

Tag	Field Name	Req	Description
39	OrdStatus	Y	Current status of the order: **Value** – **Meaning** 0 – New 1 – Partially Filled 2 – Filled 4 – Cancelled 8 – Rejected C – Expired 9 – Suspended
103	OrdRejReason	N	Code specifying the reason for the reject. Please refer to **MIT801** for a list of reject codes. The value in this field should be disregarded if Exec Type is not Rejected (8) or Expired(C).
58	Text	N	Text specifying the reason for the rejection, cancellation or expiration
32	LastQty	N	Quantity executed in this fill. Required if ExecType (150) is Trade (F).
31	LastPx	N	Price of this fill. Required if ExecType (150) is Trade (F). Will not be populated if Exec Type (150) is Restated (D).
151	LeavesQty	Y	Quantity available for further execution. Will be “0” if OrdStatus (39) is Filled (2), Cancelled (4), Rejected (8) or Expired (C).
14	CumQty	Y	Total cumulative quantity filled.
48	SecurityID	Y	Identifier of the instrument.
22	SecurityIDSource	Y	Identifier of the source of the SecurityID (48) value: **Value** – **Meaning** 8 – Exchange Symbol
1	Account	N	Value submitted with the order.
453	NoPartyIDs	Y	Number of party identifiers. Will be ‘4’, ‘5’ or ‘6’.

Tag	Field Na,e	Req	Description
➡ 448	PartyID	Y	Identifier of the party. If the optional field TraderID (PartyRole=100) is specified in New Order, Order Cancel/Replace, or Quote message, the Execution Report message will stamp the value specified in the New order or the latest order modification request. Short code in a range from 4 to 4294967295 is valid only for Client ID (3) Investment Decision Maker (122) and Executing Trader (12) party roles. Value ‘0’ is valid only for Client ID (3) and Investment Decision Maker (452 = 122) party roles. Value ‘1’ and ‘2’ are valid only for Client ID (3) party role. Value ‘3’ is valid only for Executing Trader (12). **Value** — **Meaning** 0 — None 1 — AGGR (Aggregated Order) 2 — PNAL (Pending Allocations) 3 — CLIENT If a trade is cleared when the Party Role (452) = Counterparty Firm (17), the Party ID will be populated with a CCP value derived based on user/instrument configuration. If a trade is internalised when the Party Role (452) = Counterparty Firm (17), the Party ID will be populated with the user’s own Firm ID If a trade is not cleared when the Party Role (452) = Counterparty Firm (17), the Party ID will be populated with the contra party Firm ID.
➡ 447	PartyIDSource	Y	Value ‘P’ is applicable for Client ID (452=3), Investment Decision Maker (452=122) and Executing Trader (452=12) party roles. **Value** — **Meaning** D — Proprietary/Custom Code P — Short Code
➡ 452	PartyRole	Y	Role of the specified PartyID (448): **Value** — **Meaning** 100 — Trader ID 17 — Counterparty Firm 76 — Trader Group 3 — Client ID 122 — Investment Decision Maker 12 — Executing Trader Trader Group (76), Client ID (3), Investor ID (122) and Executing Trader (12) are mandatory. Trader ID (100) and Counterparty Firm (17) are optional.

Tag	Field Na,e	Req	Description
			Counterparty Firm (17) will only be populated if Exec Type (150) is set to Trade (F) or Trade Cancel (H).
➡ 2376	PartyRoleQualifier	N	Provides a further qualification for the value specified in the PartyRole (452). Required only if PartyRole (452) is set to 3, 122 or 12 when the PartyID is a short code (i.e., 4-4294967295). **Value** — **Meaning** 22 — Algorithm 23 — Firm or Legal Entity 24 — Natural Person Value '22' is applicable for Investment Decision Maker (122) and Executing Trader (12) party roles. Value '23' is applicable for Client ID (3) party role. Value '24' is applicable for Client ID (3), Investment Decision Maker (122) and Executing Trader (12) party roles.
40	OrdType	Y	Value submitted with the order.
1091	PreTrade Anonymity	N	Value submitted with the order.
59	TimeInForce	N	Value submitted with the order.
126	ExpireTime	N	Value submitted with the order.
432	ExpireDate	N	Value submitted with the order.
54	Side	Y	Value submitted with the order.
38	OrderQty	Y	Value submitted with the order.
1138	DisplayQty	N	Quantity currently displayed in the order book. This field will also be populated for un-elected/parked orders.
1084	DisplayMethod	N	Populated only if the value submitted with the order was "4" or the display size submitted with the initial order was zero.
44	Price	N	Value submitted with the order. If Exec Type (150) = D 'Restated, this field represents the re-priced value at the start of CPX with new price equal to closing price. For Offset orders (OrdType (40) = F): If an order is parked (Order Status (39) = 9 'Suspended), it will be populated with the Price (44) submitted by the user. Otherwise, it will be populated with the calculated price based on the DRP and the offset OR Price (44) submitted by the user (whichever is more conservative).
99	StopPx	N	Value submitted with the order.
581	AccountType	Y	Type of account associated with the order: **Value** — **Meaning** 1 — Client 3 — House
528	OrderCapacity	Y	Capacity of the order:

Tag	Field Na,e	Req	Description	
			Value	**Meaning**
			A	Any other trading capacity (AOTC)
			P	Dealing on own account (DEAL)
			R	Matched Principal (MTCH)
60	TransactTime	Y	Time the transaction represented by the Execution Report occurred.	
526	SecondaryClOrdID	N	Value submitted with the order.	
583	ClOrdLinkID	N	Value submitted with the order.	

Tag	Field Na,e	Req	Description
9730	TradeLiquidity Indicator	N	Whether the order added or removed liquidity. Required only for messages generated for a trade or trade cancellations. Will be populated for both automatic trades (AT) and auction trades (UT). Possible values are: **Value** – **Meaning** A – Added Liquidity R – Removed Liquidity C – Auction
336	TradingSessionID	N	Value submitted with the order. Indicates whether the order is a CPX order or not.
880	TradeMatchID (TVTIC)	N	The unique ID of the trade. This will be a 36 base encoded value in ASCII format. The base 10 format is available in tag 27020 DecimalTVTIC. Required if ExecType (150) is Trade (F) or Trade Cancel (H). Also the identifier sent to the clearer.
20000	TypeOfTrade	N	Indicates whether the executed portion of a passive order during continuous trading session is visible or hidden. The below values are populated accordingly during Regular trading and CPX sessions, while for all other sessions enum 2 will be stamped. Valid only if ExecType (150) = F. Ignore value in all other cases. **Value** – **Meaning** 0 – Visible 1 – Hidden 2 – Not specified (for aggressive side and auction trades)
27010	PassiveOnlyOrder	N	Value submitted with the order or order amend request. **Value** – **Meaning** 0 – No constraint. 99 – Only accept order if it will not match with visible contra order. Otherwise expire order. 100 – Only accept order if setting new visible BBO. Otherwise expire order. 1 – Only accept order if setting new BBO or joining existing BBO. Otherwise expire order. 2 – Only accept order if will be at BBO or within one visible price-point. Otherwise expire order. 3 – Only accept order if will be at BBO or within two visible price-points. Otherwise expire order.
278	MDEntryID	Y	Public Order ID
110	MinQty	N	Minimum Execution Size (MES) where specified on a pegged order. Following an execution, if the remaining quantity of order < MES specified in the order, Minimum Quantity = Remaining Quantity. For pegged orders with no MES and order types other than pegged, this tag will not be present.

Tag	Field Na,e	Req	Description	
851	LastLiquidityInd	N	Whether the order added or removed liquidity. Required only for messages generated for trades (Exec Type F) or trade cancellations (Exec Type H) during continuous trading and auctions. For other execution types, the value in this tag should be ignored.	
			Value	**Meaning**
			1	Added Liquidity
			2	Removed Liquidity
			4	Auction
2668	NoTrdReg Publications	N	The number of regulatory publication rules in the repeating group.	
➡ 2669	TrdRegPublication Type	N	Specifies the type of regulatory trade publication.	
			Value	**Meaning**
			0	Pre-trade transparency waiver
➡ 2670	TrdRegPublication Reason	N	Populated when Execution Type is F or H. The Waiver Flags section describes in which scenarios the values are populated.	
			Value	**Meaning**
			4	ILQD
			3	RFPT
Component Block <Order Attributes>		N	Please refer to section 6.7.2.	
1724	OrderOrigination	N	Whether the order, quote or RFQ was generated via Direct Electronic Access (DEA) or not. Only the following values will be sent:	
			Value	**Meaning**
			5	DEA
27017	GroupID	Y	The Group ID of an Order. Will carry any value from 0 to 255. Zero is an ungrouped order.	

Tag	Field Na,e	Req	Description
30	LastMkt	N	Market (Segment MIC) where execution took place. The value in this field should be disregarded if Exec Type is not Trade (F). **Value** – **Meaning** XLON – On Exchange LSEG RM XLOM – On Exchange Non-AIM MTF AIMX – On Exchange AIM MTF XPVT – On Exchange Private Market Securities XLOX – On Exchange Mid-Priced Executions
27018	Offset	N	Offset for ATC TIF orders submitted with the order.
27020	DecimalTVTIC	N	The base 10 format of TradeMatchID (TVTIC) (880). This is the same value as provided by the GTP Trade ID and Native Trade Match ID (TVTIC). Required if ExecType (150) is Trade (F) or Trade Cancel (H).
828	TrdType	N	**Type of Trade. Populated only if ExecType (150) = F or H.** **Value** – **Meaning** 0 – Regular trade 67 – CLSE (Trade at closing price) 99 – RFQ trade
27021	PeggedExecInst	N	The instruction for permissioning to trade against mid-priced pegged orders. Any execution generated against a mid-priced pegged order will be on trading venue XLOX. **Value** – **Meaning** 1 – Permissioned for execution against mid-priced pegged orders 2 – Not permissioned for execution against mid-priced pegged orders
522	OwnerType	N	Optional identification (non-public) submitted with the order: **Value** – **Meaning** 0 – Default No flag applied. 1 – Retail investor An end retail order that meets the required definition[3] 2 – Retail Liquidity Provider An order that is only permitted to execute against an identified end retail order Value 2 is only permitted for • Mid-Priced Pegged Orders; • Mid-Priced Pegged Limit Orders; • Hidden Limit Orders; or • Orders with an IOC or FOK TIF.
Standard Trailer			

[3] Refer to related documentation for the definition of a retail order.

6.4.6 Order Cancel Reject

Tag	Field Name	Req	Description
Standard Header			
35	MsgType	Y	9 = Order Cancel Reject
Message Body			
11	ClOrdID	Y	ClOrdID (11) that was submitted with the Order Cancel or Cancel/Replace Request being rejected. Should not be prefixed or suffixed with a forward slash, or contain two consecutive forward slashes.
41	OrigClOrdID	N	OrigClOrdID (41) that was submitted with the Order Cancel or Cancel/Replace Request being rejected.
37	OrderID	Y	Server specified identifier of the order for which the cancel or cancel/replace was submitted. Will be “NONE” if the order is unknown.
39	OrdStatus	Y	Current status of the order. Will be Rejected (8) if the order is unknown or the request cannot be processed.
			Value — **Meaning**
			0 — New
			1 — Partially Filled
			2 — Filled
			4 — Cancelled
			8 — Rejected
			C — Expired
			9 — Suspended
434	CxlRej ResponseTo	Y	Type of request being rejected.
			Value — **Meaning**
			1 — Order Cancel Request
			2 — Order Cancel/Replace Request
102	CxlRejReason	Y	Code specifying the reason for the rejection. Please refer to MIT801 for a list of reject codes.
58	Text	N	Text specifying the reason for the rejection.
Standard Trailer			

6.4.7 Order Mass Cancel Report

Tag	Field Name	Req	Description
Standard Header			
35	MsgType	Y	r = Order Mass Cancel Report
Message Body			
1369	MassActionReportID	Y	Server specified identifier of the message.
11	ClOrdID	Y	Client specified identifier of Mass Cancel Request. Should not be prefixed or suffixed with a forward slash, or contain two consecutive forward slashes.
530	MassCancel RequestType	Y	Value specified in the Mass Cancel Request.
531	MassCancel Response	Y	Action taken by server. **Value** — **Meaning** 0 — Mass Cancel Request Rejected 1 — Cancelled All Orders for Instrument 7 — Cancelled All Orders 9 — Cancelled All Orders for Segment 56 — Cancelled All Orders for Group 57 — Cancelled All Orders for Instrument for Group
532	MassCancelReject Reason	N	Code specifying the reason for the rejection. Please refer to MIT801 for a list of reject codes. Required if MassCancelResponse (531) is Mass Cancel Request Rejected (0).
1180	ApplId	Y	Partition ID to which the Order Mass Cancel Report corresponds to.
Standard Trailer			

6.5 Application messages: quote handling

6.5.1 Quote

(i) The Market Maker to send an electronic or RFQ Quote

(ii) The system to send the Requester the RFQ Quote provided by the Market Maker

6.5.1.1 The Market Maker to send an electronic or RFQ Quote

Tag	Field Name	Req	Description
Standard Header			
35	MsgType	Y	S = Quote
Message Body			
1166	QuoteMsgID	Y	Client specified identifier of the message. X-Clear customers should not use more than 16 characters as a longer value will be truncated by CCP. The valid range of ASCII characters (decimal) to preserve data integrity and not to cause an issue on CCP side is 0 and 32-126, except: – 35 # (hash) – 47/(forward slash) – 59 ; (semi colon) – 92 \ (back slash) The characters outside of this range will be replaced by LSEG with "-" (hyphen) in Trade Capture Report (Message Type=AE) sent to clients and to CCP/s.
117	QuoteID	Y	Identifier of the quote entry. The value is this field should always be "1".
30006	RFQID	N	The unique identifier of the initial RFQ automatically generated via the server. Mandatory if the quote is submitted to the RFQ trade book.
1171	PrivateQuote	N	**Value** / **Meaning** Y / Private Quote Mandatory if the quote is submitted to the RFQ trade book and should not be specified otherwise.
537	QuoteType	N	Type of Quote Absence of this tag is interpreted as Firm Quote (0). Mandatory if the quote is submitted to the RFQ trade book. **Value** / **Meaning** 0 / Firm Quote 1 / Electronic Quote 2 / RFQ Quote
48	SecurityID	Y	Identifier of the instrument.
22	SecurityIDSource	Y	Identifier of the source of the SecurityID (48) value. **Value** / **Meaning** 8 / Exchange Symbol
➡ 453	NoPartyIDs	Y	Number of party identifiers. Can be '4', '5' or '6'.

Tag	Field Name	Req	Description
➡ 448	PartyID	Y	Identifier of the party. Short code in a range from 4 to 4294967295 can be used to identify the Client, Investment Decision Maker or Executing Trader. Value '0' is valid only for Client ID (3) and Investment Decision Maker (452 = 122) party roles and will be rejected when Party Role (452) is set to '12'. Value '1' and '2' are valid only for Client ID (3) party role. Value '3' is valid only for Executing Trader (12). Short Code is valid only for Client ID (3) Investment Decision Maker (122) and Executing Trader (12) party roles. During amendments, the same values should be provided as in the original quote submission for Party Roles Client ID (3), Investor ID (122) and Executing Trader (12). If a different value is specified, the value provided at the initial submission (i.e., New Quote) will be sent regardless of the value specified in the amendment. **Value** — **Meaning** 0 — None 1 — AGGR 2 — PNAL 3 — CLIENT
➡ 447	PartyIDSource	Y	Value 'P' is applicable for Client ID (452=3), Investment Decision Maker (452=122) and Executing Trader (452=12) party roles, otherwise Value 'D' is considered. During amendments, the same value should be provided as in the original quote submission. If a different value is specified, the value provided at the initial submission (i.e., New Quote) will be sent regardless of the value specified in the amendment. **Value** — **Meaning** D — Proprietary/Custom Code P — Short Code
➡ 452	PartyRole	Y	Role of the specified PartyID (448). PartyRole Trader Group (76), Client ID (3), Investment Decision Maker (122) and Executing Trader (12) are mandatory for a new quote and quote's amendment. **Value** — **Meaning** 76 — Trader Group 3 — Client ID 122 — Investment Decision Maker 12 — Executing Trader Trader ID (100) is optional. The value specified in the Trader ID (100) will not be validated by the system. **Value** — **Meaning** 100 — Trader ID

Tag	Field Name	Req	Description
			100 is not a valid value for RFQ Quotes (when QuoteType = 2)
➡ 2376	PartyRoleQualifier	N	Provides a further qualification for the value specified in the PartyRole (452). Required only if PartyRole (452) is set to 3, 122 or 12 when the PartyID is a short code (i.e., 4-4294967295), otherwise the value will be ignored. **Value** – **Meaning** 22 – Algorithm 23 – Firm or Legal Entity 24 – Natural Person Value '22' is applicable for Investment Decision Maker (122) and Executing Trader (12) party roles. Value '23' is applicable for Client ID (3) party role. Value '24' is applicable for Client ID (3) Investment Decision Maker (122) and Executing Trader (12) party roles. During amendments, the same values should be provided as in the original quote submission for Party Roles Client ID (3), Investor ID (122) and Executing Trader (12). If a different value is specified, the value provided at the initial submission (i.e., New Quote) will be sent regardless of the value specified in the amendment.
132	BidPx	N	Bid price. Required if BidSize (134) is specified.
134	BidSize	N	Bid quantity. Required if BidPx (132) is specified.
133	OfferPx	N	Offer price. Required if OfferSize (135) is specified.
135	OfferSize	N	Offer quantity. Required if OfferPx (133) is specified.
581	AccountType	Y	Type of account associated with the quote: **Value** – **Meaning** 1 – Client 3 – House Required for Electronic and RFQ quotes.
528	OrderCapacity	N	Capacity of the order **Value** – **Meaning** A – Any other trading capacity (AOTC) P – Dealing on own account (DEAL) R – Matched Principal (MTCH) Required for Electronic and RFQ quotes.
Component Block <Order Attributes>		N	Please refer to section 6.7.2.
1724	OrderOrigination	N	Whether the order, quote or RFQ was generated via Direct Electronic Access (DEA) or not. **Value** – **Meaning** 5 – DEA

Tag	Field Name	Req	Description
27021	PeggedExecInst	N	Only applicable for Electronic Quotes (Quote Type 1). The instruction for permissioning to trade against mid-priced pegged orders. Any execution generated against a mid-priced pegged order will be on trading venue XLOX. It is currently not permitted for RFQs to trade against mid-priced pegged orders. This will be reviewed in a future release. **Value** — **Meaning** 0 — Default If the order is a mid-priced pegged order, it will be eligible for execution against other pegged orders as well as all other orders. If the order is a non-mid-priced pegged order, it will not be eligible for execution against pegged orders. 1 — Where any incoming order is permitted to execute against mid-priced pegged orders in addition to all other order types. 2 — Not permitted to execute against mid-priced pegged orders This option is invalid for mid-priced pegged orders. Mid-priced pegged orders with value 2 will be rejected.
Standard Trailer			

6.5.1.2 The system to send the Requester the RFQ Quote provided by the Market Maker

Tag	Field Name	Req	Description
Standard Header			
35	MsgType	Y	S = Quote
Message Body			
117	QuoteID	Y	Identifier of the quote entry. The value is this field should always be “1”.
30006	RFQID	Y	The unique identifier of the initial RFQ automatically generated via the server
30007	BidID	N	System generated Order ID for the Bid Side of the RFQ.
30008	OfferID	N	System generated Order ID for the Sell Side.
1171	PrivateQuote	Y	**Value** — **Meaning** Y — Private Quote
537	QuoteType	Y	Type of quote. **Value** — **Meaning** 2 — RFQ Quote
48	SecurityID	Y	Identifier of the instrument.
22	SecurityIDSource	Y	Identifier of the source of the SecurityID (48) value: **Value** — **Meaning** 8 — Exchange Symbol
➡ 453	NoPartyIDs	Y	Number of party identifiers. Can be ‘1’ or ‘3’.

Tag	Field Name	Req	Description
➡ 448	PartyID	Y	**Identifier of the party:** Requestor's User ID (Party Role(452)=76) will always be populated. **In Named RFQ model only:** Market Maker's User ID (Party Role(452)=37) Market maker's Firm ID (Party Role(452)=66)
➡ 447	PartyIDSource	Y	**Value** — **Meaning** D — Proprietary/Custom Code
➡ 452	PartyRole	Y	Role of the specified PartyID (448). Trader Group (76) will always be populated. **In Named RFQ model only:** Contra Trader (37) and Market Maker (66) will be populated. **Value** — **Meaning** 76 — Trader Group 37 — Contra Trader 66 — Market Maker (Firm IDs) Trader ID (100) is optional. The value specified in the Trader ID (100) will not be validated by the system. **Value** — **Meaning** 100 — Trader ID 100 is not a valid value for RFQ Quotes (when QuoteType = 2)
132	BidPx	N	Bid price.
134	BidSize	N	Bid quantity.
133	OfferPx	N	Offer price.
135	OfferSize	N	Offer quantity.
Standard Trailer			

6.5.2 Quote Cancel

Tag	Field Name	Req	Description
Standard Header			
35	MsgType	Y	Z = Quote Cancel
Message Body			
1166	QuoteMsgID	Y	Client specified identifier of the message.
298	QuoteCancelType	Y	Type of quote cancel request. **Value** — **Meaning** 1 — Cancel for Instruments. If two independent RFQ Quotes have been submitted for the same RFQ, this cannot be used. 4 — Cancel All Quotes

Tag	Field Name	Req	Description	
			6	Cancel Buy Quote for instruments. Only applicable for single sided RFQ Quotes. RFQ ID must be specified to use this.
			7	Cancel Sell Quote for instruments. Only applicable for single sided RFQ Quotes. RFQ ID must be specified to use this.
30006	RFQID	N	The unique identifier of the initial RFQ automatically generated via the server. RFQ ID will be considered when the quote cancellation refers to a single quote (i.e., QuoteCancelType (298) of Cancel for Instruments (1), Cancel Buy Quote for Instruments (6) or Cancel Sell Quote for Instruments (7) and a NoQuoteEntries (295) of "1".). For Mass Quote Cancellation the RFQ ID will be ignored.	
30001	OrderBook	N	Identifier of the order book. In the absence of this field, the request will be routed to all the Order Books (Regular, RFQ and Firm Quote book) in case of mass Cancellation, and to the Regular book in case of single cancellation.	
			Value	**Meaning**
			1	Regular
			11	RFQ Trades
1461	NoTargetPartyIDs	Y	Number of parties. The value in this field should always be "1".	
➡ 1462	TargetPartyID	Y	Identifier of the party the Quote Cancel relates to.	
➡ 1463	TargetPartyID Source	Y	**Value**	**Meaning**
			D	Proprietary/Custom Code
➡ 1464	TargetPartyRole	Y	Role of the TargetPartyID (1462).	
			Value	**Meaning**
			1	Member ID
			76	Trader Group
295	NoQuoteEntries	N	Number of instruments for which quotes are to be cancelled. The value in this field may not be greater than 25. Required if QuoteCancel Type (298) is Cancel for Instruments (1).	
➡ 48	SecurityID	N	Identifier of the instrument. Required if the type of quote cancel request is based on an instrument(s).	
➡ 22	SecurityIDSource	N	Identifier of the source of the SecurityID (48) value. Required if the SecurityID (48) is specified.	
			Value	**Meaning**
			8	Exchange Symbol
Standard Trailer				

6.5.3 Quote Status Report

Tag	Field Name	Req	Description
Standard Header			
35	MsgType	Y	AI = Quote Status Report
Message Body			
1166	QuoteMsgID	Y	Client specified identifier of the quote, quote cancel or quote response request the message relates to.
131	QuoteReqID	N	Client specified identifier of the RFQ that is being responded to.
30006	RFQID	N	The unique identifier of the initial RFQ automatically generated via the server.
30007	BidID	N	Unique identifier assigned to the bid side of the quote/RFQ quote. Should be ignored if a RFQ quote amendment is rejected. In the case of a Dual-Sided Normal/RFQ Quote rejections only, Bid ID will be stamped in the FIX Quote Status Report/Quote Ack message
30008	OfferID	N	Unique identifier assigned to the offer side of the quote/RFQ Quote. Should be ignored if a RFQ quote amendment is rejected.
298	QuoteCancel Type	N	Value specified in the Quote Cancel request. Required if the message is sent in response to a Quote Cancel.
453	NoPartyIDs	Y	Number of party identifiers.
➡ 448	PartyID	Y	Identifier of the party. If the optional field TraderID (PartyRole=100) is specified in the Quote message, the Quote Status Report message will stamp the value specified in the Quote. Short code in a range from 4 to 4294967295 is valid only for Client ID (3), Investment Decision Maker (122) and Executing Trader (12) party roles. Value ‘0’ is valid only for Client ID (3) and Investment Decision Maker (452 = 122) party roles. Value ‘1’ and ‘2’ are valid only for Client ID (3) party role. Value ‘3’ is valid. **Value** — **Meaning** 0 — None 1 — AGGR (Aggregated Order) 2 — PNAL (Pending Allocations) 3 — CLIENT
➡ 447	PartyIDSource	Y	Value ‘P’ is applicable for Client ID (452=3), Investment Decision Maker (452=122) and Executing Trader (452=12) party roles. **Value** — **Meaning** D — Proprietary/Custom Code P — Short Code

Tag	Field Name	Req	Description
➡ 452	PartyRole	Y	Role of the specified PartyID (448). It is mandatory to have PartyRole Trader Group (76). Trader ID (100) is optional. The value specified in the Trader ID (100) will not be validated by the system. For an Electronic Quote acknowledgement, values ‘100’,’76’,’3’,’122’ and ‘3’ will be stamped. For a positive acknowledgement of a Quote request, ‘100’,’76’,’3’,’122’,’66’ and ‘3’ will be stamped. No values will be stamped for rejected hit/lift of a RFQ or a response to a quote cancel request. **Value** — **Meaning** 100 — Trader ID 76 — Trader Group 66 — Market Maker (Firm IDs) 3 — Client ID 122 — Investment Decision Maker 12 — Executing Trader
➡ 2376	PartyRoleQualifier	N	Provides a further qualification for the value specified in the PartyRole (452). Required only if PartyRole (452) is set to 3, 122 or 12 when the PartyID is a short code (i.e., 4-4294967295). **Value** — **Meaning** 22 — Algorithm 23 — Firm or Legal Entity 24 — Natural Person Value ‘22’ is applicable for Investment Decision Maker (122) and Executing Trader (12) party roles. Value ‘23’ is applicable for Client ID (3) party role. Value ‘24’ is applicable for Client ID (3) Investment Decision Maker (122) and Executing Trader (12) party roles.
537	QuoteType	N	Type of quote: **Value** — **Meaning** 0 — Firm Quote 1 — Executable Quote 2 — RFQ Quote
297	QuoteStatus	Y	Status of the quote, cancel request or RFQ: **Value** — **Meaning** 0 — Accepted 5 — Rejected 6 — Removed from Market 7 — Expired 17 — Cancelled

Tag	Field Name	Req	Description
300	QuoteRejectReason	N	Code specifying the reason for the reject. Please refer to MIT801 for a list of reject codes. Required if QuoteStatus (297) is Rejected (5). Will also be populated for certain expirations.
58	Text	N	Text specifying the reason for the rejection, cancellation or expiration.
126	ExpireTime	N	UTC time stamp of the time the negotiation process terminated at. Will be in YYYYMMDD-HH:MM:SS format.
Component Block <Order Attributes>		N	Please refer to section 6.7.2.
1724	OrderOrigination	N	Whether the order, quote or RFQ was generated via Direct Electronic Access (DEA) or not. Only the following values will be sent: **Value** – **Meaning** 5 – DEA
Standard Trailer			

6.5.4 Mass Quote Acknowledgement

Tag	Field Name	Req	Description
Standard Header			
35	MsgType	Y	b = Mass Quote Acknowledgement
Message Body			
1180	ApplId	N	Partition ID to which the Order Mass Cancel Report corresponds to.
117	QuoteID	Y	QuoteMsgID (1166) of the Quote Cancel the message is sent in response to.
298	QuoteCancelType	N	Value submitted in the quote cancel request. Required if the message is sent in response to a Quote Cancel.
297	QuoteStatus	Y	Status of the cancel request: **Value** – **Meaning** 0 – Accepted 5 – Rejected
300	QuoteRejectReason	N	Code specifying the reason for the rejection. Please refer to MIT801 for a list of reject codes. Required if QuoteStatus (297) is Rejected (5).
58	Text	N	Text specifying the reason for the rejection.
296	NoQuoteSets	N	Number of quote sets. Required if the message is a response to a quote cancel.
➡ 302	QuoteSetID	N	Identifier of the quote set which should be the first entry in the repeating group. Required if NoQuoteSets (296) is specified.
➡ 295	NoQuoteEntries	N	Number of quote entries in the quote set.
➡ ➡ 299	Quote EntryID	N	Identifier of the quote entry which should be the first entry in the repeating group. If specified, the value in this field will always be “1”. Required if NoQuoteEntries (295) is specified.
➡ ➡ 48	SecurityID	N	Identifier of the instrument. Required if NoQuoteEntries (295) is specified.

Tag	Field Name	Req	Description
➡ ➡ 22	SecurityIDSource	N	Identifier of the source of the SecurityID (48) value. Required if NoQuoteEntries (295) is specified. **Value** – **Meaning** 8 – Exchange Symbol
➡ ➡ 1167	Quote Entry Status	N	Status of the cancel request for the quote entry. Required if NoQuoteEntries (295) is specified. **Value** – **Meaning** 5 – Rejected
➡ ➡ 368	Quote Entry Reject Reason	N	Code specifying the reason the quote or cancel request for the quote entry was rejected. Please refer to MIT801 for a list of reject codes. Required if QuoteEntry Status (1167) is Rejected (5).
Standard Trailer			

6.5.5 Execution Report

Tag	Field Name	Req	Description
Standard Header			
35	MsgType	Y	8 = Execution Report
Message Body			
17	ExecID	Y	Server specified identifier of the message.
11	ClOrdID	Y	QuoteMsgID (1166) of the message last used to update the quote entry.
37	OrderID	Y	Server specified identifier of the executed side. This will be a 62 base encoded value in ASCII format. By converting this to binary, this can be mapped with GTP Order ID.
30006	RFQID	N	The unique identifier of the initial RFQ automatically generated via the server.
150	ExecType	Y	Reason the Execution Report was generated: **Value** – **Meaning** D – Restated F – Trade H – Trade Cancel C – Expired 4 – Cancelled
19	ExecRefID	N	Reference to the execution being cancelled or corrected. Required if ExecType (150) is Trade Cancel (H)

Tag	Field Name	Req	Description	
378	ExecRestatement Reason	N	Reason the order was restated. Required if ExecType (150) is Restated (D) and if order is cancelled via Market Operations. When an order is amended or cancelled by Market Supervision, value ‘8’ will be populated. In some scenarios, when a trade is cancelled by market supervision, value ‘8’ will be populated in the Execution Reports sent for order restatements.	
			Value	**Meaning**
			3	Order re-priced at start of CPX
			8	Market Option
			51	Partial decline or OrderQty
			100	Order replenishment
54	Side	Y	Side of the quote that was executed.	
			Value	**Meaning**
			1	Buy
			2	Sell
32	LastQty	N	Quantity executed in this fill. Required if ExecType (150) is Trade (F).	
31	LastPx	N	Price of this fill. Required if ExecType (150) is Trade (F). Will not be populated if Exec Type (150) is Restated (D).	
39	OrdStatus	Y	Current status of the executed side of the quote entry:	
			Value	**Meaning**
			0	New
			1	Partially Filled
			2	Filled
			4	Cancelled
			C	Expired
151	LeavesQty	Y	Quantity available for further execution. Will be “0” if OrdStatus (39) is Filled (2), Cancelled (4) or Expired (C).	
14	CumQty	Y	Will always be “0”.	
48	SecurityID	Y	Identifier of the instrument.	
22	SecurityIDSource	Y	Identifier of the source of the SecurityID (48) value:	
			Value	**Meaning**
			8	Exchange Symbol
453	NoPartyIDs	Y	Number of party identifiers. Will be ‘4’, ‘5’ or ‘6’.	

Tag	Field Name	Req	Description
➡ 448	PartyID	Y	Identifier of the party. If the optional field TraderID (PartyRole=100) is specified in the Quote message, the Execution Report message will stamp the value specified in the Quote. Short code in a range from 4 to 4294967295 is valid only for Client ID (3), Investment Decision Maker (122) and Executing Trader (12) party roles. Value '0' is valid only for Client ID (3) and Investment Decision Maker (452 = 122) party roles. Value '1' and '2' are valid only for Client ID (3) party role. Value '3' is valid only for Executing Trader (12). **Value** — **Meaning** 0 — None 1 — AGGR (Aggregated Order) 2 — PNAL (Pending Allocations) 3 — CLIENT If a trade is cleared when the Party Role (452) = Counterparty Firm (17), the Party ID will be populated with a CCP value derived based on user/instrument configuration. If a trade is internalised when the Party Role (452) = Counterparty Firm (17), the Party ID will be populated with the user's own Firm ID. If a trade is not cleared when the Party Role (452) = Counterparty Firm (17), the Party ID will be populated with the contra party Firm ID.
➡ 447	PartyIDSource	Y	Value 'P' is applicable for Client ID (452=3), Investment Decision Maker (452=122) and Executing Trader (452=12) party roles. **Value** — **Meaning** D — Proprietary/Custom Code P — Short Code
➡ 452	PartyRole	Y	Role of the specified PartyID (448). **Value** — **Meaning** 100 — Trader ID 17 — Counterparty Firm 76 — Trader Group 3 — Client ID 122 — Investment Decision Maker 12 — Executing Trader Trader Group (76), Client ID (3), Investor ID (122) and Executing Trader (12) are mandatory. Trader ID (100) and Counterparty Firm (17) are optional. Counterparty Firm (17) will only be populated if Exec Type (150) is set to Trade (F) or Trade Cancel (H).

Tag	Field Name	Req	Description
➡ 2376	PartyRoleQualifier	N	Provides a further qualification for the value specified in the PartyRole (452). Required only if PartyRole (452) is set to 3, 122 or 12 when the PartyID is a short code (i.e., 4-4294967295). **Value** – **Meaning** 22 – Algorithm 23 – Firm or Legal Entity 24 – Natural Person Value '22' is applicable for Investment Decision Maker (122) and Executing Trader (12) party roles. Value '23' is applicable for Client ID (3) party role. Value '24' is applicable for Client ID (3) Investment Decision Maker (122) and Executing Trader (12) party roles.
40	OrdType	Y	**Value** – **Meaning** 1 – Market 2 – Limit 1 (Market) is only valid in the Execution Report sent for an RFQ.
59	TimeInForce	Y	Time qualifier of the quote entry: **Value** – **Meaning** 0 – Day
38	OrderQty	Y	Quantity submitted in RFQ or quote, depending on the recipient of the Execution Report. For Executable Quotes, order quantity will be equal to the addition of Leaves Quantity (tag 151) and previously executed quantities.
44	Price	N	Bid or offer price submitted with the last update for the quote entry. Not populated in the Execution Report sent for an RFQ
581	AccountType	N	Type of account associated with the quote. Only required for Executable quotes. **Value** – **Meaning** 1 – Client 3 – House
528	OrderCapacity	N	Capacity of the order: **Value** – **Meaning** A – Any other trading capacity (AOTC) P – Dealing on own account (DEAL) R – Matched Principal (MTCH)
60	TransactTime	Y	Time the transaction represented by the Execution Report occurred.

Tag	Field Name	Req	Description
9730	TradeLiquidity Indicator	N	Whether the order added or removed liquidity. Required only for messages generated for a trade or trade cancellations. Will be populated for both automatic trades (AT) and auction trades (UT). Possible values are: **Value** – **Meaning** A – Added Liquidity R – Removed Liquidity C – Auction
880	TradeMatchID (TVTIC)	N	The unique ID of the trade. This will be a 36 base encoded value in ASCII format. The base 10 format is available in tag 27020 DecimalTVTIC. Required if ExecType (150) is Trade (F) or Trade Cancel (H) Also the identifier sent to the clearer.
278	MDEntryID	Y	Public Order ID
6	AvgPx	N	Volume Weighted Average Price of all the executions reported so far for an RFQ on the requestor side. It will also be the executed price on the quote side. This will be updated for trade cancels/corrections as well. AvgPx will be populated for all types of RFQs with an execution
20000	TypeOfTrade	N	Indicates whether the executed portion of a passive order is visible or hidden. The below values are populated accordingly during Regular trading and CPX sessions, while for all other sessions enum 2 will be stamped. Valid only if ExecType (150) = F. Ignore value in all other cases. **Value** – **Meaning** 0 – Visible 1 – Hidden 2 – Not specified (for aggressive side, auction trades and RFQ trades)
2668	NoTrdReg Publications	N	The number of regulatory publication rules in the repeating group.
➡ 2669	TrdRegPublication Type	N	Specifies the type of regulatory trade publication: **Value** – **Meaning** 0 – Pre-trade transparency waiver
➡ 2670	TrdRegPublication Reason	N	Additional reason for trade publication type specified in TrdRegPublicationType(2669). Populated when Execution Type is F or H. The Waiver Flags section describes in which scenarios the values are populated. **Value** – **Meaning** 4 – ILQD 3 – RFPT

Tag	Field Name	Req	Description
Component Block <Order Attributes>		N	Please refer to section 6.7.2.
1724	OrderOrigination	N	Whether the order, quote or RFQ was generated via Direct Electronic Access (DEA) or not. Only the following values will be sent: **Value** – **Meaning** 5 – DEA
27017	GroupID	Y	The Group ID of an Order
33007	ContraOrderBook	N	Identifier of the order book of the contra party of an RFQ execution. This field will only be populated in the Execution Report sent to the requestor when an RFQ executes with an order in the normal book Absence of this field is interpreted as RFQ Trade book for RFQ related executions **Value** – **Meaning** 1 – Regular
30	LastMkt	N	Market (Segment MIC) where execution took place. The value in this field should be disregarded if Exec Type is not Trade (F). **Value** – **Meaning** XLON – On Exchange LSEG RM XLOM – On Exchange Non-AIM MTF AIMX – On Exchange AIM MTF XLOX – On Exchange Mid-Priced Executions
27020	DecimalTVTIC	N	The base 10 format of TradeMatchID (TVTIC) (880). This is the same value as provided by the GTP Trade ID and Native Trade Match ID (TVTIC). Required if ExecType (150) is Trade (F) or Trade Cancel (H).
828	TrdType	N	**Type of Trade. Populated only if ExecType (150) = F or H.** **Value** – **Meaning** 0 – Regular trade 67 – CLSE (Trade at closing price) 99 – RFQ trade
27021	PeggedExecInst	N	The instruction for permissioning to trade against mid-priced pegged orders. Any execution generated against a mid-priced pegged order will be on trading venue XLOX. It is currently not permitted for RFQs to trade against mid-priced pegged orders. This will be reviewed in a future release. **Value** – **Meaning** 1 – Permissioned for execution against mid-priced pegged orders 2 – Not permissioned for execution against mid-priced pegged orders.
Standard Trailer			

6.5.6 Quote Request

Generated by:

(i) The Requester to submit an RFQ

(ii) The server to send the RFQ to the Market Maker

6.5.6.1 The Requester to submit an RFQ

Tag	Field Name	Req	Description	
Standard Header				
35	MsgType	Y	R = Quote Request.	
Message Body				
131	QuoteReqID	Y	Client specified identifier of the RFQ. The valid range of ASCII characters (decimal) to preserve data integrity and not to cause an issue on CCP side is 0 and 32-126, except: – 35 # (hash) – 47/(forward slash) – 59 ; (semi colon) – 92 \ (back slash) The characters outside of this range will be replaced by LSEG with "-" (hyphen) in Trade Capture Report (Message Type=AE) sent to clients and to CCP/s.	
1171	PrivateQuote	Y	**Value**	**Meaning**
			Y	Private Quote
30001	OrderBook	Y	Identifier of the order book. In absence of this tag the request will be rejected via a session reject.	
			Value	**Meaning**
			11	RFQ Trades
126	ExpireTime	N	Optional. UTC timestamp of the time the negotiation process will be terminated. Will be in YYYYMMDD-HH:MM:SS format with an optional.uuu milliseconds suffix.	
528	OrderCapacity	Y	Capacity of the Order:	
			Value	**Meaning**
			A	Any other trading capacity (AOTC)
			P	Dealing on own account (DEAL)
			R	Matched Principal (MTCH)
146	NoRelatedSym	Y	Should always be "1".	
➡ 48	SecurityID	Y	Identifier of the instrument.	
➡ 22	SecurityIDSource	Y	Identifier of the source of the SecurityID (48) value.	
			Value	**Meaning**
			8	Exchange Symbol

Tag	Field Name	Req	Description
➡ 54	Side	N	Optional. Which side, if any, a one-sided RFQ is submitted for. **Value** — **Meaning** 1 — Buy 2 — Sell A valid side must be specified when the Quote Request Type = 2, 102 or 103 (Automatic).
➡ 38	Order Qty	Y	Quantity that the Requester is expecting to trade. Should be greater than '0'.
➡ 303	QuoteRequestType	N	Indicates the type of Quote Request **Value** — **Meaning** 1 — Manual (Named if any Market Maker IDs are specified, else Anonymous) 2 — Automatic (Named if any Market Maker IDs are specified, else Anonymous) 100 — Manual (Named) 101 — Manual (Anonymous) 102 — Automatic (Named) 103 — Automatic (Anonymous) Absence of this tag is interpreted as '1' (Manual). Refer to Section 2.14 for more details on RFQ models.
➡ 44	Price	N	Optional Limit Price. Absence of the tag or a value of "0" will be interpreted as opting to auto peg the limit price to far touch.
➡ 581	AccountType	Y	Type of account associated with the request: **Value** — **Meaning** 1 — Client 3 — House
➡ 33001	RFQExecutionDelay	N	The minimum number of seconds from the time of RFQ submission to be elapsed for the RFQ execution to be triggered automatically. Only valid when QuoteRequestType is 2, 102 or 103 (Automatic).
➡ 33002	RFQMinQuotes	N	The minimum number of market maker quotes to be available for the RFQ execution to be triggered automatically. Only valid when QuoteRequestType is 2, 102 or 103 (Automatic).

Tag	Field Name	Req	Description
➡ 33004	RFQDiscloseSide	N	Instructs the system whether to disclose the side of the request to the market makers. Only valid when QuoteRequestType is 4 or 5 (Automatic). **Value** – **Meaning** 0 – Do not disclose 1 – Disclose Absence of this tag is interpreted as “0” (Do not disclose). Only valid when QuoteResponseType is 2, 102 or 103 (Automatic). The value will be ignored otherwise. Note that for Manual RFQs (QuoteRequestType 1, 100 or 101), the side is always disclosed to the Market Makers. For Auto RFQ Execution Strategy ‘Sub LIS Auction RFQ with Order Book Sweep’ – “1” (Disclose) is not allowed and will be rejected
➡ 453	NoPartyIDs	Y	Number of party identifiers;. Should at least be one. Includes Requester and Market Markers.
➡ ➡ 448	PartyID	Y	Identifier of the party. Short code in a range from 4 to 4294967295 can be used to identify the Client, Investment Decision Maker or Executing Trader. Value ‘0’ is valid only for Client ID (3) and Investment Decision Maker (452 = 122) party roles and will be rejected when Party Role (452) is set to ‘12’. Value ‘1’ and ‘2’ are valid only for Client ID (3) party role. Value ‘3’ is valid only for Executing Trader (12). Short Code is valid only for Client ID (3), Investment Decision Maker (122) and Executing Trader (12) party roles **Value** – **Meaning** 0 – None 1 – AGGR (Aggregated Order) 2 – PNAL (Pending Allocations) 3 – CLIENT
➡ ➡ 447	PartyIDSource	N	Value ‘P’ is applicable for Client ID (452=3), Investment Decision Maker (452=122) and Executing Trader (452=12) party roles, otherwise Value ‘D’ is considered. **Value** – **Meaning** D – Proprietary/Custom Code P – Short Code
➡ ➡ 452	PartyRole	Y	Role of the specified PartyID (448). It is mandatory to have PartyRole Trader Group (76). Market Makers (Firm IDs) (66) should be specified in the Named models. **Value** – **Meaning** 66 – Market Makers (Firm IDs) 76 – Trader Group 3 – Client ID 122 – Investment Decision Maker 12 – Executing Trader

Tag	Field Name	Req	Description
➡ ➡ 2376	PartyRoleQualifier	N	Provides a further qualification for the value specified in the PartyRole (452). Required only if PartyRole (452) is set to 3, 122 or 12 when the PartyID is a short code (i.e., 4-4294967295), otherwise the value will be ignored. **Value** – **Meaning** 22 – Algorithm 23 – Firm or Legal Entity 24 – Natural Person Value '22' is applicable for Investment Decision Maker (122) and Executing Trader (12) party roles. Value '23' is applicable for Client ID (3) party role. Value '24' is applicable for Client ID (3) Investment Decision Maker (122) and Executing Trader (12) party roles.
➡ 27019	MarketMakerRank	N	The rank of the market makers the request should be routed to. If specified, the request will be routed to the market makers with a rank equal to or better than the specified rank for the instrument, provided rank based routing is valid for the RFQ. This field is only valid in the Quote Request for an auto RFQ. A value of "0" will be considered as unspecified.
Component Block <Order Attributes>		N	Please refer to section 6.7.2.
1724	OrderOrigination	N	Whether the order, quote or RFQ was generated via Direct Electronic Access (DEA) or not. Only the following value can be sent by the customer: **Value** – **Meaning** 5 – DEA
Standard Trailer			

6.5.6.2 The server to send the RFQ to the Market Maker

Tag	Field Name	Req	Description
Standard Header			
35	MsgType	Y	R = Quote Request.
Message Body			
30006	RFQID	Y	The unique identifier of the initial RFQ automatically generated via the server:
1171	PrivateQuote	Y	**Value** – **Meaning** Y – Private Quote
30001	OrderBook	Y	Identifier of the order book: **Value** – **Meaning** 11 – RFQ Trades
146	NoRelatedSym	Y	Will always be "1".
➡ 48	SecurityID	Y	Identifier of the instrument.

Tag	Field Name	Req	Description	
➡ 22	SecurityIDSource	Y	Identifier of the source of the SecurityID (48) value:	
			Value	**Meaning**
			8	Exchange Symbol
➡ 54	Side	N	Manual RFQs will always disclose the side to the market maker. For Automatic RFQs, the Requester can choose whether to disclose the side to the market maker.	
			Value	**Meaning**
			1	Buy
			2	Sell
➡ 38	Order Qty	Y	Quantity that the Requester is expecting to trade. Should be greater than ‘0’.	
➡ 303	QuoteRequestType	N	Indicates the type of Quote Request:	
			Value	**Meaning**
			1	Manual
			2	Automatic
			Absence of this tag is interpreted as ‘1 (Manual)’.	
➡ 453	NoPartyIDs	Y	Number of party identifiers. Can be ‘1’ or ‘3’.	
➡ ➡ 448	PartyID	Y	Identifier of the party.	
➡ ➡ 447	PartyIDSource	N	**Value**	**Meaning**
			D	Proprietary/Custom Code
➡ ➡ 452	PartyRole	Y	Role of the specified PartyID (448). Trader Group (76) is mandatory and populated with the Market Maker’s User ID. In Named Model only: Requestor’s User ID (Party Role(452)=37), Requestor’s Firm ID (Party Role(452)=66)	
			Value	**Meaning**
			66	Market Makers (Firm IDs)
			37	Contra Trader
			76	Trader Group
➡ 33006	AutoRFQExec Strategy	N	This field will include the applicable Auto RFQ Execution Strategy ‘Sub LIS Auction with Order Book Sweep or LIS Winner Takes All’ model. This is applicable for ETPs Only.	
			Value	**Meaning**
			1	Sub LIS Auction
			4	LIS Winner Takes All
			This field will not be populated for manual RFQs and for Auto RFQ Winner Takes All for Equities & DRs.	

Tag	Field Name	Req	Description
➡ 1913	NumOfCompetitors	N	The number of competing Respondents (the total number of market maker firms) the quote request has been routed to. This field will not be populated for manual RFQs and for Auto RFQs Winner Takes All. This field will be populated for Auto-complete Auction RFQ with Order Book Sweep.
Standard Trailer			

6.5.7 Quote Request Reject

Generated by:

(i) The server to reject an RFQ from a Requester

(ii) The Market Marker to reject the RFQ

(iii) The server to communicate the rejection of the RFQ by a Market Maker to the Requester

6.5.7.1 The server to reject an RFQ from a Requester or communicate Market Maker rejection to Requester

Tag	Field Name	Req	Description	
Standard Header				
35	MsgType	Y	AG = Quote Request Reject	
Message Body				
1180	ApplID	Y	The server will stamp the identifier of the matching partition for the instrument.	
131	QuoteReqID	Y	Client specified identifier of the RFQ being rejected.	
30006	RFQID	N	The unique identifier of the RFQ automatically generated via the server.	
658	QuoteRequest RejectReason	N	Code specifying the reason for the rejection.	
58	Text	N	Text specifying the reason for the rejection.	
30001	OrderBook	Y	**Value**	**Meaning**
			11	RFQ Trades
146	NoRelatedSym	Y	Value in this field will always be '1'.	
➡ 48	SecurityID	Y	Identifier of the instrument.	
➡ 22	SecurityIDSource	Y	Identifier of the source of the SecurityID (48) value:	
			Value	**Meaning**
			8	Exchange Symbol
➡ 54	Side	N	Value submitted with the RFQ.	
➡ 38	OrderQty	Y	Value submitted with the RFQ.	
➡ 453	NoPartyIDs	Y	Number of party identifiers. Can be ‘1’ or ‘3’.	
➡ 448	PartyID	Y	Identifier of the party.	

Tag	Field Name	Req	Description
➡ 447	PartyIDSource	N	Value 'P' is applicable for Client ID (452=3), Investment Decision Maker (452=122) and Executing Trader (452=12) party roles. **Value** – **Meaning** D – Proprietary/Custom Code P – Short Code
➡ 452	PartyRole	N	Role of the specified PartyID (448). When RFQ is rejected by the server, the values '76','3','122' and '12' will be stamped. When RFQ is rejected by a Market Maker, '76' will always be stamped, '66' and '37' will be stamped in the Named model. **Value** – **Meaning** 17 – Counterparty Firm 76 – Trader Group 37 – Contra Trader 66 – Market Maker (Firm IDs) 3 – Client ID 122 – Investment Decision Maker 12 – Executing Trader
➡ 2376	PartyRoleQualifier	N	Provides a further qualification for the value specified in the PartyRole (452). Required only if PartyRole (452) is set to 3, 122 or 12 when the PartyID is a short code (i.e., 4- 4294967295). **Value** – **Meaning** 22 – Algorithm 23 – Firm or Legal Entity 24 – Natural Person Value '22' is applicable for Investment Decision Maker (122) and Executing Trader (12) party roles. Value '23' is applicable for Client ID (3) party role. Value '24' is applicable for Client ID (3) Investment Decision Maker (122) and Executing Trader (12) party roles.
Component Block <Order Attributes>		N	Please refer to section 6.7.2. It is only populated if it was submitted by the Requestor and rejected by the server.
1724	OrderOrigination	N	Whether the order, quote or RFQ was generated via Direct Electronic Access (DEA) or not. Only the following values will be sent: **Value** – **Meaning** 5 – DEA It is only populated if it was submitted by the Requestor and rejected by the server.
Standard Trailer			

6.5.7.2 The Market Marker to reject an RFQ

Tag	Field Name	Req	Description	
Standard Header				
35	MsgType	Y	AG = Quote Request Reject.	
Message Body				
30006	RFQID	Y	The unique identifier of the RFQ automatically generated via the server.	
30001	OrderBook	Y	**Value**	**Meaning**
			11	RFQ Trades
146	NoRelatedSym	Y	Value in this field should always be '1'.	
➡ 48	SecurityID	Y	Identifier of the instrument.	
➡ 22	SecurityID	Y	Identifier of the source of the SecurityID (48) value:	
			Value	**Meaning**
			8	Exchange Symbol
➡ 54	Side	N	Value submitted with the RFQ.	
➡ 38	OrderQty	N	Value submitted with the RFQ.	
➡ 453	NoPartyIDs	Y	Number of party identifiers. Must be '1'.	
➡ 448	PartyID	Y	Identifier of the party.	
➡ 447	PartyIDSource	Y	**Value**	**Meaning**
			D	Proprietary/Custom Code
➡ 452	PartyRole	Y	Role of the specified PartyID (448). It is mandatory to have PartyRole Trader Group (76).	
			Value	**Meaning**
			76	Trader Group
Standard Trailer				

6.5.8 Quote Ack

Generated by:

(i) The server to acknowledge a new/modified RFQ Quote or to acknowledge a Quote Cancel request to the Market Maker.

Tag	Field Name	Req	Description
Standard Header			
35	MsgType	Y	CW = Quote Ack
Message Body			
1180	ApplID	Y	The server will stamp the identifier of the matching partition for the instrument.
117	QuoteID	Y	Will be always set to '1'.
1166	QuoteMsgID	N	Client specified identifier of the quote or quote cancel request the message relates to.

Tag	Field Name	Req	Description	
30006	RFQID	Y	Server specified identifier of the initial RFQ sent by the Requester.	
30007	BidID	N	Server specified identifier of the bid side of the RFQ quote. Should be ignored if a RFQ quote amendment is rejected. In the case of a Dual-Sided Normal/RFQ Quote rejections, only Bid ID will be stamped in the FIX Quote Status Report/Quote Ack messages	
30008	OfferID	N	Server specified identifier of the offer side of the RFQ quote. Should be ignored if an RFQ quote amendment is rejected.	
1865	QuoteAckStatus	Y	**Value**	**Meaning**
			1	Accepted
			2	Rejected
300	QuoteRejectReason	N	Conditionally required if QuoteAckStatus(1865) is Rejected (2).	
58	Text	N	Text specifying the reason for the rejection or cancellation.	
60	TransactTime	Y	Time the message was generated.	
30001	OrderBook	Y	**Value**	**Meaning**
			11	RFQ Trades
453	NoPartyIDs	N	No of Party IDs. Will be '4'.	
➡ 448	PartyID	N	Identifier of the party. Same value as submitted with the quote.	
➡ 447	PartyIDSource	N	Same value as submitted with the quote.	
➡ 452	PartyRole	N	Role of the specified PartyID (448). Same value as submitted with the quote.	
			Value	**Meaning**
			76	Trader Group
			3	Client ID
			122	Investment Decision Maker
			12	Executing Trader
➡ 2376	PartyRoleQualifier	N	Provides a further qualification for the value specified in the PartyRole (452). Same value as submitted with the quote.	
Component Block <Order Attributes>		N	Please refer to section 6.7.2.	
1724	OrderOrigination	N	Whether the order, quote or RFQ was generated via Direct Electronic Access (DEA) or not. Only the following values will be sent:	
			Value	**Meaning**
			5	DEA
Standard Trailer				

6.5.9 Quote Response

Generated by:

(i) The Requester to execute (accept) an RFQ Quote (valid for a Manual RFQ model only)

(ii) The Requestor to amend/cancel an RFQ

(iii) The Requestor to make RFQ quotes public

(iv) The server to communicate the status of an RFQ and quote to the Requester and Market Makers

6.5.9.1 The Requester to execute (accept) an RFQ Quote or amend/cancel an RFQ or make RFQ quotes public

Tag	Field Name	Req	Description	
Standard Header				
35	MsgType	Y	AJ = Quote Response	
Message Body				
1166	QuoteMsgID	Y	The client specified identifier of the RFQ modification/cancellation/execution request. Should be unique per user.	
30006	RFQID	Y	The unique ID of the negotiation process.	
30007	BidID	N	The unique identifier of the bid side of the quote. When quote response is used to accept a quote, this field will be required if Side (54) is Buy (1).	
30008	OfferID	N	The unique identifier of the offer side of the quote. When quote response is used to accept a quote, this field will be required if Side (54) is Sell (2).	
694	QuoteRespType	Y	**Value**	**Meaning**
			1	Hit/Lift
			7	End Trade
			100	Replace
			102	Make RFQ Quotes public
48	Security ID	Y	Instrument ID of instrument.	
22	SecurityIDSource	Y	Identifier of the source of the SecurityID (48) value:	
			Value	**Meaning**
			8	Exchange Symbol
38	OrderQty	Y	The quantity to be executed. When amending or cancelling an RFQ, quantity should be the same as the quantity in the initial RFQ.	
44	Price	N	When the quote response is used to accept a specific quote (QuoteRespType =1), the bid or offer price of the selected quote should be specified. When the quote response is used to amend the RFQ (QuoteRespType =100), the new limit price should be specified. Absence of the tag or a value of “0” will be interpreted as opting to auto peg the limit price to far touch.	
54	Side	N	Value submitted in the RFQ:	
			Value	**Meaning**
			1	Buy
			2	Sell

Tag	Field Name	Req	Description	
30001	OrderBook	Y	**Value**	**Meaning**
			11	RFQ Trades
453	NoPartyIDs	Y	Number of party identifiers. Must be '1'.	
➡ 448	PartyID	N	Identifier of the party.	
➡ 447	PartyIDSource	Y	**Value**	**Meaning**
			D	Proprietary/Custom Code
➡ 452	PartyRole	Y	Role of the specified PartyID (448). When accepting a quote or initiating an RFQ cancellation, only value '76' is applicable.	
			Value	**Meaning**
			76	Trader Group
Standard Trailer				

6.5.9.2 The server to communicate the status of an RFQ and quote to the Requester and Market Makers

Tag	Field Name	Req	Description
Standard Header			
35	MsgType	Y	AJ = Quote Response
Message Body			
1180	ApplID	Y	Identity of the partition.
1166	QuoteMsgID	Y	The client specified identifier of the quote message for which the message is generated (only if the message is sent for market makers with respect to a specified quote). The client specified identifier of the RFQ modification/cancellation/execution request (only if the message is sent to the requestor with respect to an RFQ).
30006	RFQID	Y	The unique ID of the negotiation process.
30007	BidID	N	The unique identifier of the bid side of the quote.
30008	OfferID	N	The unique identifier of the offer side of the quote.
694	QuoteRespType	Y	**Value** — **Meaning**
			3 — Expired
			7 — End Trade
			8 — Timed Out
			11 — Cancelled
			100 — Replace
			101 — Executable
48	Security ID	Y	Instrument ID of instrument.

Tag	Field Name	Req	Description	
22	SecurityIDSource	Y	Identifier of the source of the SecurityID (48) value:	
			Value	**Meaning**
			8	Exchange Symbol
1917	Price	N	Required in the 'Select and Match' execution policy. Price stated by the Requester when accepting a Quote submitted by a Market Maker to trade against. The new limit price when modifying the limit price of an RFQ (when QuoteRespType = 100 (replace)). A value of zero will be interpreted as opting to auto peg the limit price to far touch.	
54	Side	N	Value submitted in the RFQ:	
			Value	**Meaning**
			1	Buy
			2	Sell
60	TransactTime	Y	Time the message was generated.	
30001	OrderBook	Y	**Value**	**Meaning**
			11	RFQ Trades
453	NoPartyIDs	Y	Number of party identifiers. Up to three can be populated in the Server Initiated Quote Response message.	
➡ 448	PartyID	Y	Identifier of the party.	
➡ 447	PartyIDSource	Y	Value 'P' is applicable for Client ID (452=3), Investment Decision Maker (452=122) and Executing Trader (452=12) party roles.	
			Value	**Meaning**
			D	Proprietary/Custom Code
			P	Short Code
➡ 452	PartyRole	Y	Role of the specified PartyID (448). If specified in the relevant client initiated messages, the server initiated quote response messages will contain this information and will only be sent to the party who submitted the original values.	
			Value	**Meaning**
			76	Trader Group
			3	Client ID
			122	Investment Decision Maker
			12	Executing Trader
➡ 2376	PartyRoleQualifier	N	Provides a further qualification for the value specified in the PartyRole (452). Required only if PartyRole (452) is set to 3, 122 or 12 when the PartyID is a short code (i.e., 4-4294967295).	
			Value	**Meaning**
			22	Algorithm
			23	Firm or Legal Entity
			24	Natural Person

Tag	Field Name	Req	Description
			Value '22' is applicable for Investment Decision Maker (122) and Executing Trader (12) party roles. Value '23' is applicable for Client ID (3) party role. Value '24' is applicable for Client ID (3) Investment Decision Maker (122) and Executing Trader (12) party roles.
581	AccountType	N	Type of account associated with the quote. Required when the message is generated as a response to a quote to a Market Maker. **Value** – **Meaning** 1 – Client 3 – House
528	OrderCapacity	N	Capacity of the order. Required when the message is generated as a response to a quote to a Market Maker. **Value** – **Meaning** A – Any other trading capacity (AOTC) P – Dealing on own account (DEAL) R – Matched Principal (MTCH)
58	Text	N	Text specifying the reason for the rejection, cancellation or expiration.
Component Block <Order Attributes>		N	Please refer to section 6.7.2.
1724	OrderOrigination	N	Whether the order, quote or RFQ was generated via Direct Electronic Access (DEA) or not. **Value** – **Meaning** 5 – DEA
Standard Trailer			

6.6 Application messages: others

6.6.1 Business Message Reject

Tag	Field Name	Req	Description
Standard Header			
35	MsgType	Y	j = Business Message Reject
Message Body			
379	BusinessReject RefID	N	Client specified identifier (e.g., ClOrdID, QuoteMsgID, etc…) of the rejected message if it is available.
45	RefSeqNum	Y	MsgSeqNum (34) of the rejected message.
372	RefMsgType	Y	MsgType (35) of the rejected message.
371	RefTagID	N	If a message is rejected to due to an issue with a particular field, its tag number will be indicated.

Tag	Field Name	Req	Description
380	BusinessReject Reason	Y	Code specifying the reason for the reject. Please refer to MIT801 for a list of reject codes.
58	Text	N	Text specifying the reason for the rejection (not including TagID. See RefTagID for this information).
Standard Trailer			

6.7 Components of application messages

6.7.1 Trading Session

Tag	Field Name	Req	Description
386	NoTrading Sessions	N	Number of sessions the order is valid for. If specified, the value in this field should always be '1'.
➡ 336	TradingSessionID	N	Session the order is valid for: **Value** – **Meaning** a – Closing Price Cross

6.7.2 Order Attributes

Tag	Field Name	Req	Description
2593	NoOrderAttributes	N	Number of order attributes. A value more than '2' will not be allowed. During amendments, the values submitted at the initial submission will be sent back.
➡ 2594	OrderAttributeType	N	Indicates if the order was generated via an algorithm or is submitted as a part of liquidity provision (i.e., as a part of the market making strategy). **Value** – **Meaning** 4 – Algorithm 2 – Liquidity Provision
2595	OrderAttributeValue	N	Mandatory if OrderAttributeType (2594) is specified. **Value** – **Meaning** Y – Yes

7.0 Process flows

7.1 Order handling

7.1.1 Order Status Changes

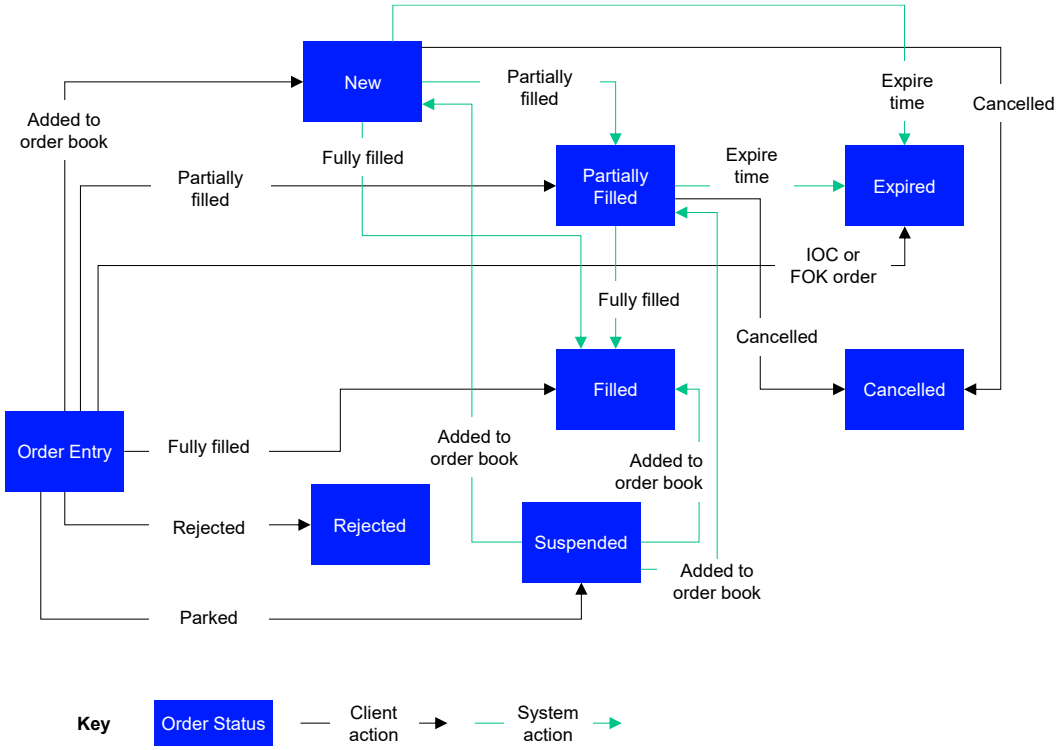

7.1.1.1 Market Operations Actions

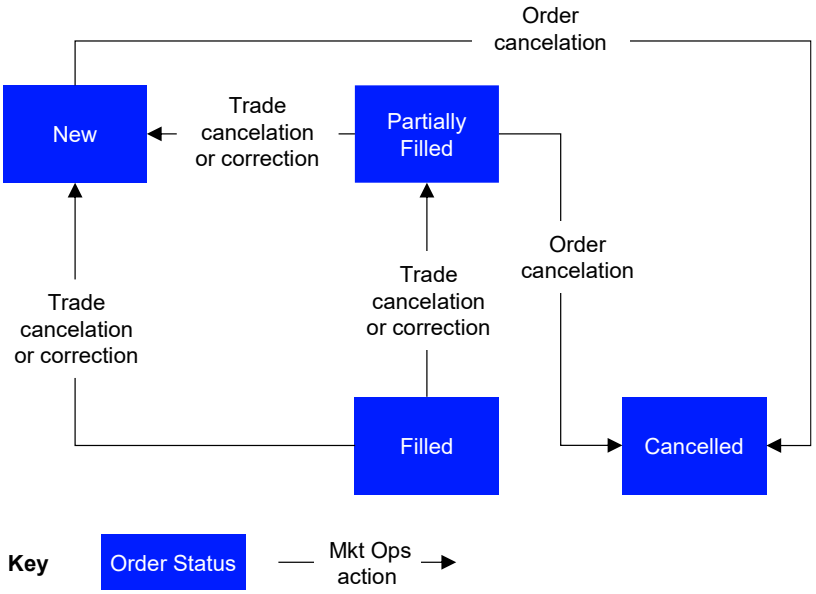

7.2 Quote handling

7.2.1 Single Quotes

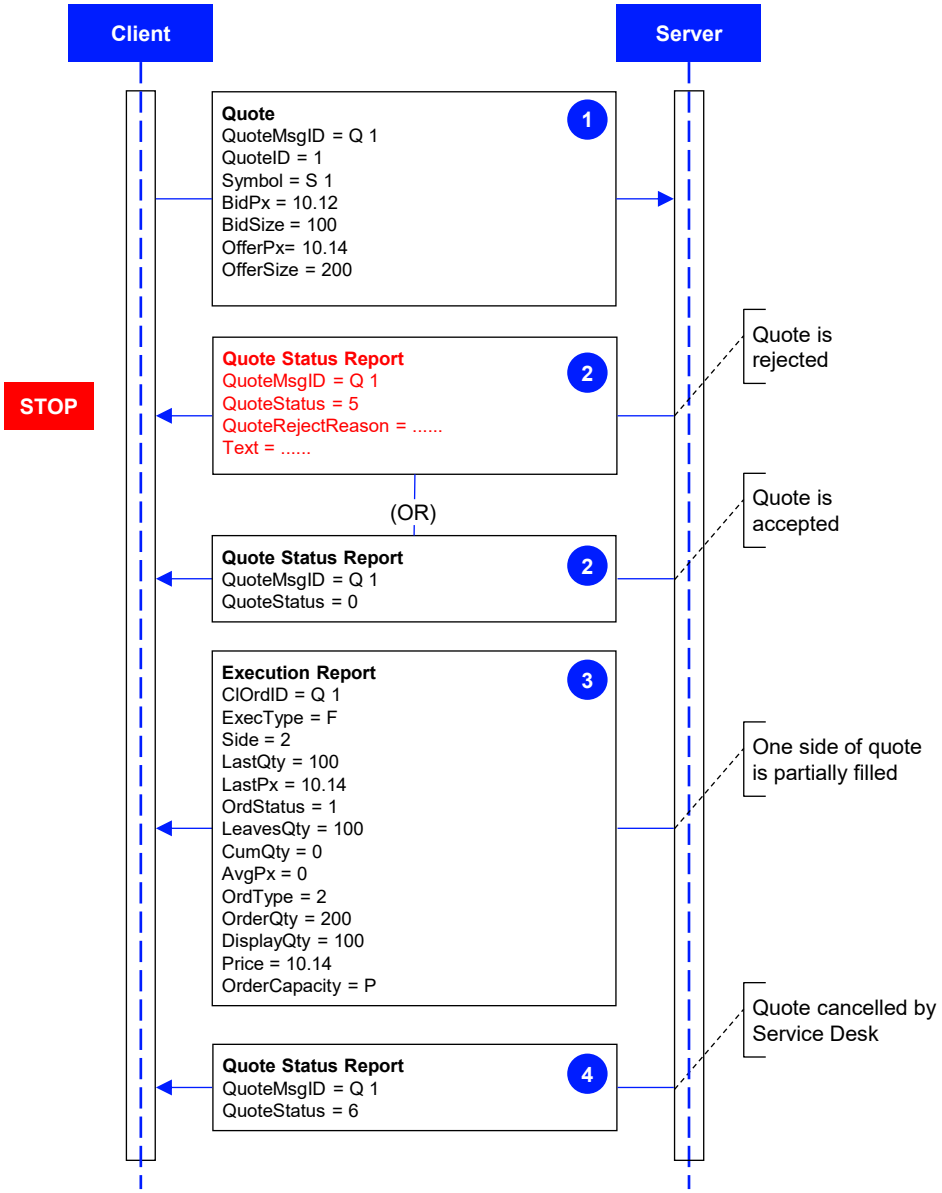

7.2.2 Quote cancellation

7.2.2.1 Cancellation of a single quote

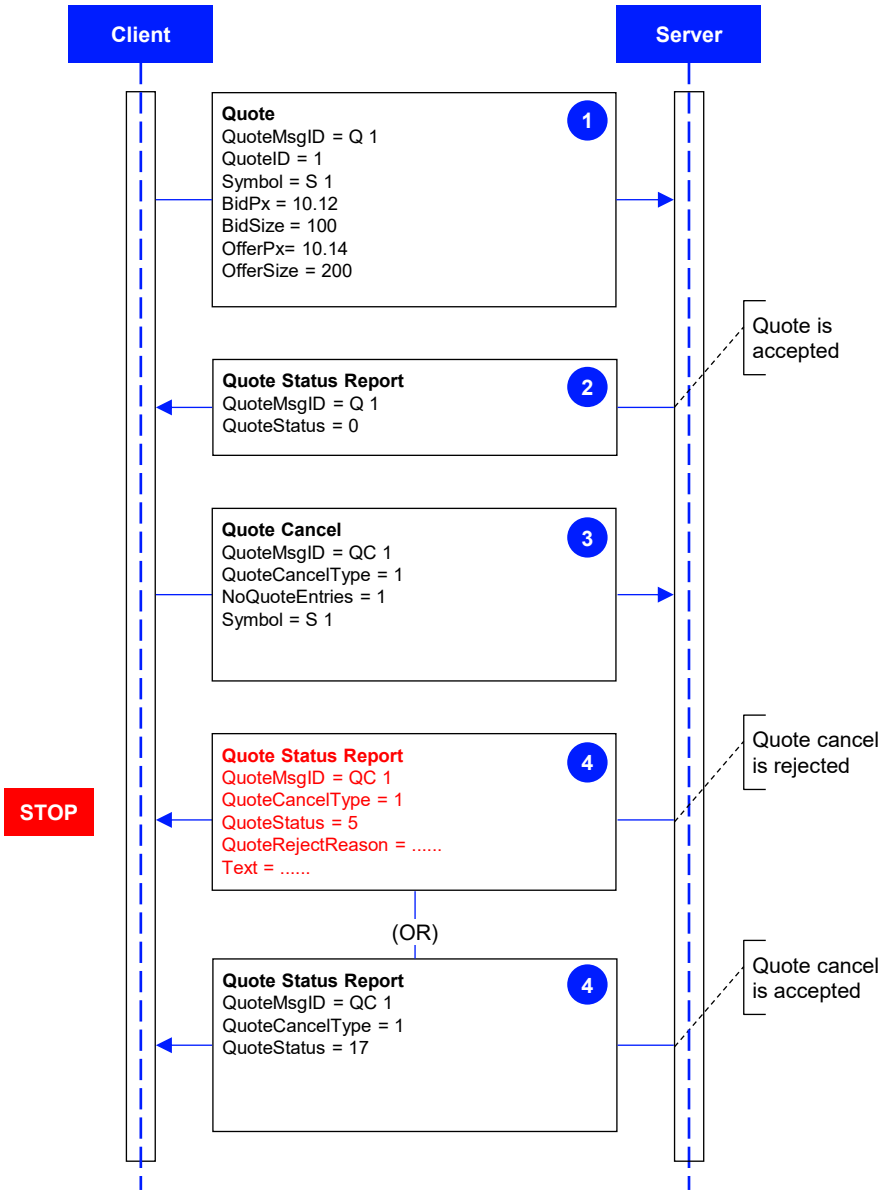

7.2.2.2 Mass cancellation of quotes

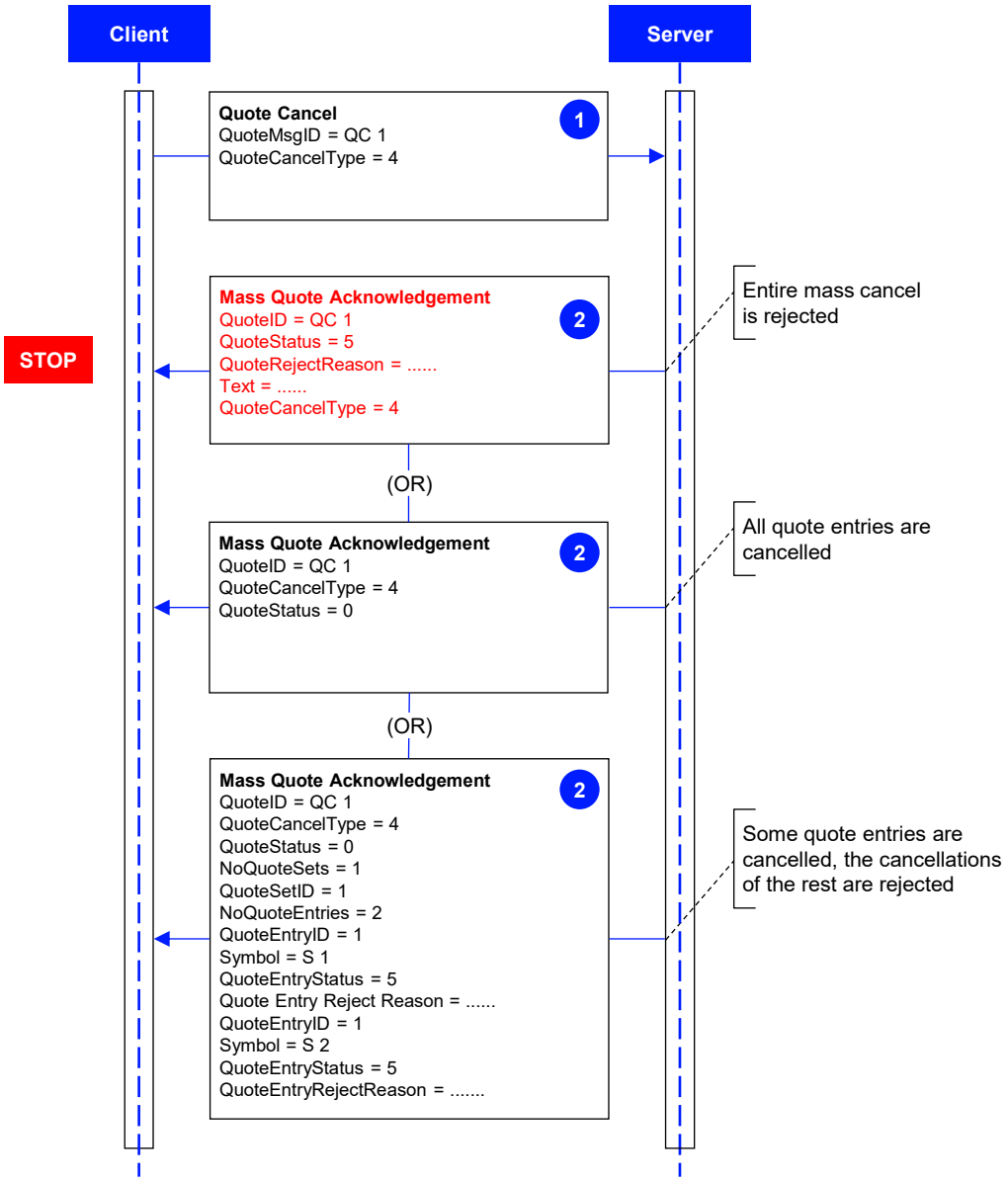

8.0 Service availability

Customer Activity	Availability (UTC)
Telnet Access	4:00 – 17:32
Login Access	4:00 – 17:32
Order Deletion	7:50 – 17:15

Clients wishing to test connectivity outside of these hours should review **MIT501 – Guide to Testing Services** for more information.

London Stock Exchange
10 Paternoster Square
London EC4M 4LS
T: +44(0) 20 7797 1000
www.londonstockexchange.com

Copyright © August 2026 London Stock Exchange plc. Registered in England and Wales No. 2075721. London Stock Exchange plc has used all reasonable efforts to ensure that the information contained in this publication is correct at the time of going to press, but shall not be liable for decisions made in reliance on it. London Stock Exchange and the coat of arms device are registered trade marks of London Stock Exchange plc.

LONDON
STOCK
EXCHANGE